Single Event Testing of the AFL12028SX/CH

Hak Kim, Michael Campola and Anthony Phan

Code 561.4
NASA-GSFC

June 26, 2008

1. Introduction

The International Rectifier AFL12028SX/CH DC to DC converter was tested for Single Event Effects (SEE) with heavy ions at Texas A&M University Cyclotron Facility on June 18, 2008. This work was performed for the Express Logistic Carrier (ELC) project.

2. Tested Devices

The AFL12028SX/CH is a 120V in 28V single output DC to DC converter featuring high power density with 4A (112W) minimum full load output current in a 2.5”x1.5”x0.38” steel case. Information about the tested devices is given in Table 1.

Table 1 – AFL12028 Device

Part Number:	AFL12028SX/CH
Manufacturer:	International Rectifier
Part Function:	DC-DC converter, 80 to 160V input, 28V single output
Technology:	Hybrid
Quantity Tested:	2
Serial Numbers:	0734010, 0734016
Lot Date Code (LDC):	0718

Two devices were de-lidded for the test. Figure 1 shows a picture of the de-lidded device. The device is a hybrid component, containing a number of active components, such as an operational amplifier, MOSFET, and voltage reference. All the active components are scattered over the part and could not all be irradiated at the same time since radiation beam spot size is only 1” diameter. Three areas that were irradiated separately are indicated in the Figure 1.

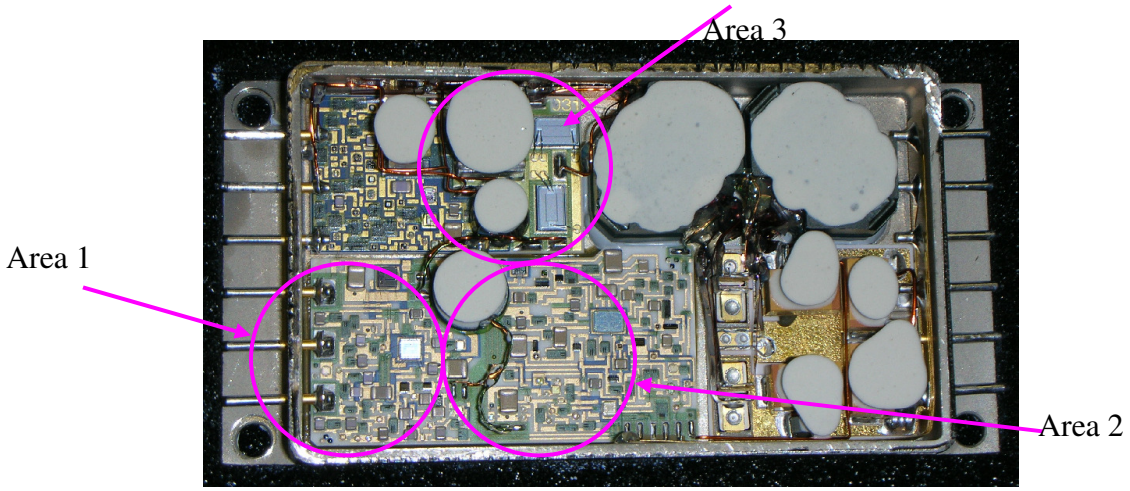

Figure 1 – Picture of a de-lidded DC-DC converter and identification

3. Test Setup

Test circuit, as shown in Figure 2, consisted of Power Supply, Electronic Load, Digital Oscilloscope, Temperature Control Unit, Computer with GPIB Controller, and Computer with USB connection to the scope. The digital scope was set to trigger on output voltages that were 500mV above or below a nominal 28V output to capture SET. The Device Under Test (DUT) was mounted on a copper plate with a liquid cooling pipe and Temperature Control Unit was used to maintain desired DUT temperature by circulating refrigerated water. Power supply current was monitored all time for SEL and SEB detection.

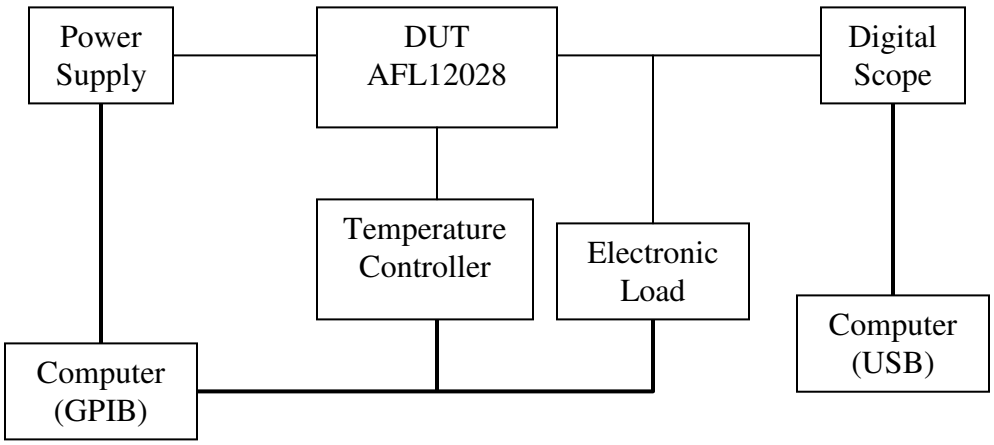

Figure 2 – Block Diagram for the testing of the AFL12028

4. Test Description

Irradiation Conditions

The tests were performed at TEXAS A&M with 25 MeV/u beams. The parts were irradiated in air. The distance between the beam output and the device under test (DUT) is 7 cm. The ions used and their characteristics are described in Table 2. The LET and range values given in Table 2 are the LET and ranges on the DUT after the 25.4 μm Aramica window and 7 cm of air.

Table 2 – Ions used at TEXAS A&M

Ion	Energy		Range at Target (μm)	LET at target (MeV-cm2/mg)
	(MeV/amu)	(MeV)		
^{40}Ar	22.8	913	433.6	5.8
^{84}Kr	21.5	1801	272.5	21
^{129}Xe	20.5	2645	225.9	41.5

DUT with serial number 0734016 (DUT1) was tested with all three ions while DUT with serial number 0734010 (DUT2) was tested with Krypton and Xenon only. All irradiations were done at the normal incident angle since no other angle of incident was feasible due to the shadowing by the inactive components and the device case.

DUT Bias Conditions

The DUT bias conditions are listed in Table 3. Three input voltages with minimum of three loads conditions were investigated.

Table 3 – DUT Bias Conditions

Test Type	Temperature	Input Voltage (V)	Input Current (mA)	Output Load (%)	Output Load (A)
SET	Ambient	120	21.5	0	0
			340	30	1.2
			765	70	2.8
			1100	100	4
		80	27	0	0
			500	30	1.2
			1650	100	4
		160	15	0	0
			263	30	1.2
			574	70	2.8
			827	100	4

5. Results

The complete list of run by run results of the SEE testing is shown in Appendix A.

Single Event Transient

No Single Event Transient (SET) was observed with all three ions and with all output loads. The maximum fluence was 10^7, $5x10^6$, and 10^6 particles for Ar, Kr and Xe respectively.

Destructive Failure

Destructive failures with Xe ion were observed when Area 3 was irradiated. DUT1 had a destructive failure at $1.5x10^5$ fluence with 100% load and DUT2 showed the failure at $1.5\ x10^4$ particle fluence with 70% load. Device output of 28V dropped to near ground level when the failure happened and the output never recovered. Figure 3 depicts the output wave form at the time of failure. All failures happened with 120V input voltage.

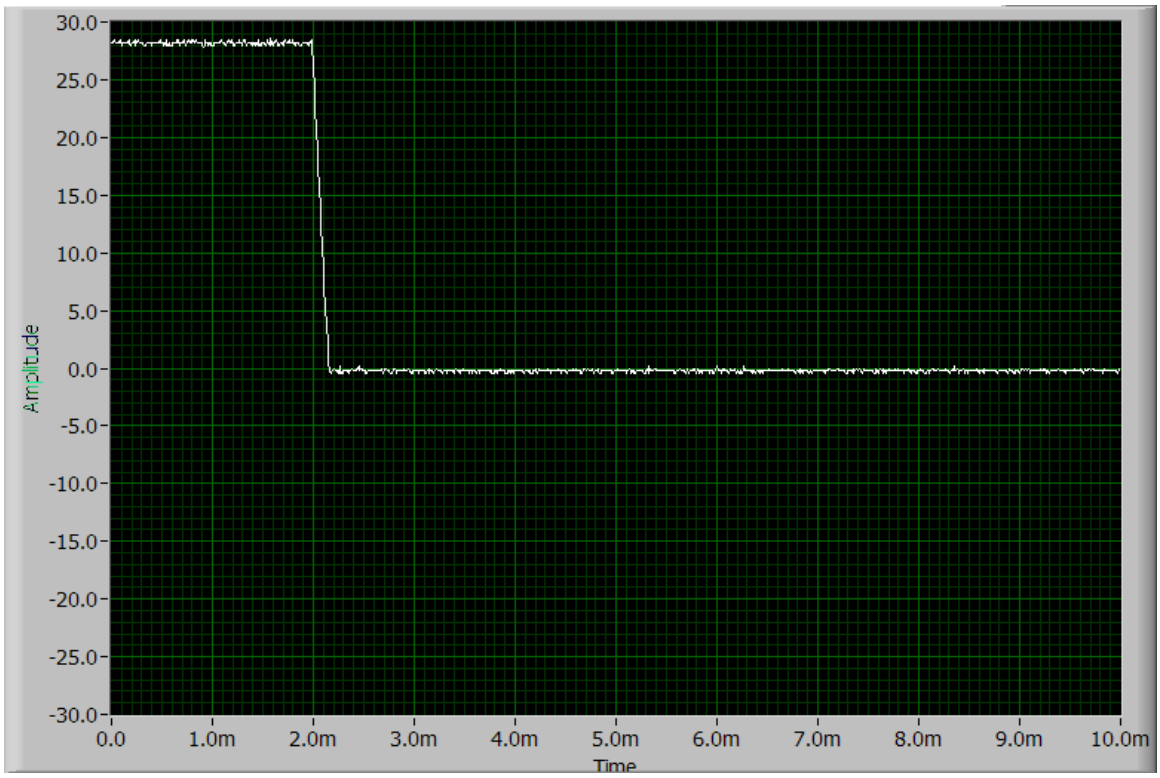

Figure 3 – Output at the time of Destructive Failure (DUT1)

The radiation beam was removed then and device revival effort was performed by recycling input power. However, the device showed high input current symptom by drawing more than the triple of the nominal current input. It was only limited by the power supply current limit that was supplying the power to the DUT. After the DUT was taken out of the irradiation room, visible inspection revealed that there was a burnt spot in Area 3. Figure 4 shows the DUT after the failure.

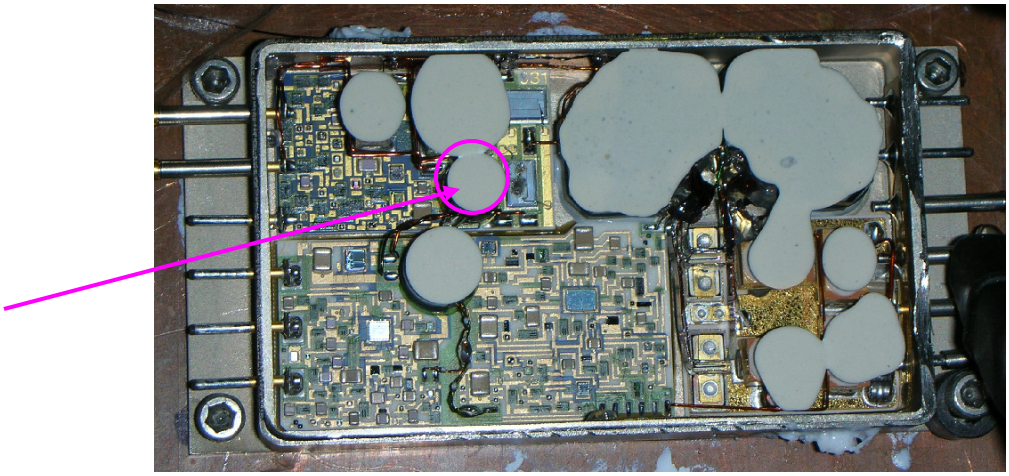

Figure 4 – Burnt Spot Observed (DUT2)

6. Conclusions

Even though there was no SET monitored up to 10^6 Xe particles with 30% output load, there was a destructive failure with low fluence of Xe (as low as 1.5×10^4 particles) with 70% load. The threshold of destructive failure conditions are yet to be determined since the device was not tested with other output load between 30% and 70% and the test under LET between 21 (of Kr) and 41.5 (of Xe) was not performed. Responses to various input voltages should also need a study.

Appendix A – AFL12820SX/CH SEE Testing

Run #	DUT #	Location	Ion	Vin(V)	Load(%)	Iin(mA)	Vth	LET	Flux	Fluence	SET	DNF	SEL	SEB	Note
1	0734016	1	Ar-25	120	0	21.25	+/-0.5	5.8	2.00E+05	1.00E+07	0	0	0		
2	0734016	1	Ar-25	120	30	340	+/-0.5	5.8	2.00E+05	1.00E+07	0	0	0		
3	0734016	1	Ar-25	120	100	1100	+/-0.5	5.8	1.70E+05	1.00E+07	0	0	0		
4	0734016	2	Ar-25	120	0	21.25	+/-0.5	5.8	1.60E+05	1.00E+07	0	0	0		
5	0734016	2	Ar-25	120	100	1100	+/-0.5	5.8	1.70E+05	1.00E+07	0	0	0		
6	0734016	2	Ar-25	120	30	338.7	+/-0.5	5.8	1.70E+05	1.00E+07	0	0	0		
7	0734016	2	Ar-25	80	0	27.5	+/-0.5	5.8	1.65E+05	1.00E+07	0	0	0		
8	0734016	2	Ar-25	80	30	498.8	+/-0.5	5.8	1.57E+05	1.00E+07	0	0	0		
9	0734016	2	Ar-25	80	100	1650	+/-0.5	5.8	1.52E+05	1.00E+07	0	0	0		
10	0734016	2	Ar-25	160	0	16.25	+/-0.5	5.8	1.56E+05	1.00E+07	0	0	0		
11	0734016	2	Ar-25	160	30	262.5	+/-0.5	5.8	1.58E+06	1.00E+07	0	0	0		
12	0734016	2	Ar-25	160	100	825.3	+/-0.5	5.8	1.47E+05	1.00E+07	0	0	0		
13	0734016	3	Ar-25	120	0	21.25	+/-0.5	5.8	1.51E+05	1.00E+07	0	0	0		
14	0734016	3	Ar-25	120	30	341	+/-0.5	5.8	1.60E+05	1.00E+07	0	0	0		
15	0734016	3	Ar-25	120	100	1100	+/-0.5	5.8	1.63E+05	1.00E+07	0	0	0		
16	0734016	3	Ar-25	80	0	26.25	+/-0.5	5.8	1.50E+05	1.00E+07	0	0	0		
17	0734016	3	Ar-25	80	30	498.8	+/-0.5	5.8	1.54E+05	1.00E+07	0	0	0		
18	0734016	3	Ar-25	80	100	1650	+/-0.5	5.8	1.57E+05	1.00E+07	0	0	0		
19	0734016	3	Ar-25	160	0	16.25	+/-0.5	5.8	1.70E+05	1.00E+07	0	0	0		
20	0734016	3	Ar-25	160	30	262.5	+/-0.5	5.8	1.71E+05	1.00E+07	0	0	0		
21	0734016	3	Ar-25	160	100	827	+/-0.5	5.8	1.87E+05	1.00E+07	0	0	0		
22	0734016	3	Kr-25	120	0	21.25	+/-0.5	21	3.77E+04	1.00E+06	0	0	0		
23	0734016	3	Kr-25	120	30	340	+/-0.5	21	3.70E+04	1.00E+06	0	0	0		
24	0734016	3	Kr-25	120	100	1100	+/-0.5	21	3.74E+04	1.00E+06	0	0	0		
25	0734016	3	Kr-25	80	0	26.25	+/-0.5	21	3.76E+04	1.00E+06	0	0	0		
26	0734016	3	Kr-25	80	30	498.8	+/-0.5	21	3.76E+04	1.00E+06	0	0	0		
27	0734016	3	Kr-25	80	100	1660	+/-0.5	21	3.79E+04	5.00E+06	0	0	0		

Appendix A – AFL12820SX/CH SEE Testing (Cont.)

Run #	DUT #	Location	Ion	Vin(V)	Load(%)	Iin(mA)	Vth	LET	Flux	Fluence	SET	DNF	SEL	SEB	Note
28	0734016	3	Kr-25	160	0	15	+/-0.5	21	3.66E+04	5.00E+06	0	0	0		
29	0734016	3	Kr-25	160	30	262.5	+/-0.5	21	3.49E+04	5.00E+06	0	0	0		
30	0734016	3	Kr-25	160	100	827.5	+/-0.5	21	3.66E+04	5.00E+06	0	0	0		
31	0734016	2	Kr-25	120	0	21.25	+/-0.5	21	4.02E+04	5.00E+06	0	0	0		
32	0734016	2	Kr-25	120	30	340	+/-0.5	21	3.59E+04	5.00E+06	0	0	0		
33	0734016	2	Kr-25	120	100	1100	+/-0.5	21	3.63E+04	5.00E+06	0	0	0		
34	0734016	2	Kr-25	80	0	26.25	+/-0.5	21	3.82E+04	5.00E+06	0	0	0		
35	0734016	2	Kr-25	80	30	498.8	+/-0.5	21	3.81E+04	5.00E+06	0	0	0		
36	0734016	2	Kr-25	80	100	1650	+/-0.5	21	3.78E+04	5.00E+06	0	0	0		
37	0734016	2	Kr-25	160	0	15	+/-0.5	21	3.76E+04	5.00E+06	0	0	0		
38	0734016	2	Kr-25	160	30	262.5	+/-0.5	21	3.79E+04	5.00E+06	0	0	0		
39	0734016	2	Kr-25	160	100	827.5	+/-0.5	21	3.87E+00	5.00E+06	0	0	0		
40	0734016	1	Kr-25	120	0	21.25	+/-0.5	21	3.58E+04	5.00E+06	0	0	0		
41	0734016	1	Kr-25	120	30	340	+/-0.5	21	3.85E+04	2.00E+06	0	0	0		
42	0734016	1	Kr-25	120	100	1100	+/-0.5	21	3.69E+04	2.00E+06	0	0	0		
43	0734016	1	Kr-25	80	0	26.25	+/-0.5	21	3.72E+04	2.00E+06	0	0	0		
44	0734016	1	Kr-25	80	30	498.8	+/-0.5	21	3.78E+04	2.00E+06	0	0	0		
45	0734016	1	Kr-25	80	100	1650	+/-0.5	21	3.73E+04	2.00E+06	0	0	0		
46	0734016	1	Kr-25	160	0	15	+/-0.5	21	3.61E+04	2.00E+06	0	0	0		
47	0734016	1	Kr-25	160	30	262.5	+/-0.5	21	3.57E+04	2.00E+06	0	0	0		
48	0734016	1	Kr-25	160	100	827.5	+/-0.5	21	3.69E+04	2.00E+06	0	0	0		
49	0734016	1	Xe-25	120	0	21.25	+/-0.5	41.5	2.00E+04	1.00E+06	0	0	0		
50	0734016	1	Xe-25	120	30	340	+/-0.5	41.5	1.89E+04	1.00E+06	0	0	0		
51	0734016	1	Xe-25	120	100	1100	+/-0.5	41.5	1.97E+04	1.00E+06	0	0	0		
52	0734016	1	Xe-25	80	0	26.25	+/-0.5	41.5	2.00E+04	1.00E+06	0	0	0		
53	0734016	1	Xe-25	80	30	498.8	+/-0.5	41.5	2.03E+04	1.00E+06	0	0	0		
54	0734016	1	Xe-25	80	100	1650	+/-0.5	41.5	1.91E+04	1.00E+06	0	0	0		

Appendix A – AFL12820SX/CH SEE Testing (Cont.)

Run #	DUT #	Location	Ion	Vin(V)	Load(%)	Iin(mA)	Vth	LET	Flux	Fluence	SET	DNF	SEL	SEB	Note
55	0734016	1	Xe-25	160	0	15	+/-0.5	41.5	1.87E+04	1.00E+06	0	0	0		
56	0734016	1	Xe-25	160	30	262.5	+/-0.5	41.5	2.17E+04	1.00E+06	0	0	0		
57	0734016	1	Xe-25	160	100	827.5	+/-0.5	41.5	2.21E+04	1.00E+06	0	0	0		
58	0734016	2	Xe-25	120	0	21.25	+/-0.5	41.5	2.17E+04	1.00E+06	0	0	0		
59	0734016	2	Xe-25	120	30	340	+/-0.5	41.5	2.14E+04	1.00E+06	0	0	0		
60	0734016	2	Xe-25	120	100	1100	+/-0.5	41.5	2.20E+04	1.00E+06	0	0	0		
61	0734016	2	Xe-25	80	0	26.25	+/-0.5	41.5	2.10E+04	1.00E+06	0	0	0		
62	0734016	2	Xe-25	80	30	498.8	+/-0.5	41.5	2.16E+04	1.00E+06	0	0	0		
63	0734016	2	Xe-25	80	100	1650	+/-0.5	41.5	2.09E+04	1.00E+06	0	0	0		
64	0734016	2	Xe-25	160	0	15	+/-0.5	41.5	2.10E+04	1.00E+06	0	0	0		
65	0734016	2	Xe-25	160	30	262.5	+/-0.5	41.5	1.85E+04	1.00E+06	0	0	0		
66	0734016	2	Xe-25	160	30	262.5	+/-0.5	41.5	2.03E+04	2.00E+06	0	0	0		
67	0734016	2	Xe-25	160	100	827.5	+/-0.5	41.5	1.89E+04	1.00E+06	0	0	0		
68	0734016	2	Xe-25	160	70	573.8	+/-0.5	41.5	1.85E+04	1.00E+06	0	0	0		
69	0734016	2	Xe-25	160	70	573.8	+/-0.5	41.5	1.82E+04	1.00E+06	0	0	0		
70	0734016	3	Xe-25	120	0	21.25	+/-0.5	41.5	1.83E+04	1.00E+06	0	0	0		
71	0734016	3	Xe-25	120	30	340	+/-0.5	41.5	1.70E+04	1.00E+06	0	0	0		
72	0734016	3	Xe-25	120	100	1100	+/-0.5	41.5	1.63E+04	9.85E+05	0	0	0	1	~1.5E5 Fluence
73	0734010	2	Kr-25	120	0	21.5	+/-0.5	21	9.20E+04	1.00E+06	0	0	0		
74	0734010	2	Kr-25	120	30	342	+/-0.5	21	9.46E+04	2.00E+06	0	0	0		
75	0734010	2	Kr-25	120	100	1100	+/-0.5	21	8.98E+04	2.00E+06	0	0	0		
76	0734010	2	Kr-25	80	0	26.25	+/-0.5	21	8.37E+04	2.00E+06	0	0	0		
77	0734010	2	Kr-25	80	30	500	+/-0.5	21	7.97E+04	2.00E+06	0	0	0		
78	0734010	2	Kr-25	80	100	1650	+/-0.5	21	7.95E+04	2.00E+06	0	0	0		
79	0734010	2	Kr-25	160	0	15	+/-0.5	21	7.17E+04	2.94E+06	0	0	0		
80	0734010	2	Kr-25	160	30	262.5	+/-0.5	21	7.44E+04	2.00E+06	0	0	0		
81	0734010	2	Kr-25	160	100	827.5	+/-0.5	21	7.72E+04	2.00E+06	0	0	0		

Appendix A – AFL12820SX/CH SEE Testing (Cont.)

Run #	DUT #	Location	Ion	Vin(V)	Load(%)	Iin(mA)	Vth	LET	Flux	Fluence	SET	DNF	SEL	SEB	Note
82	0734010	1	Kr-25	120	0	21.5	+/-0.5	21	6.67E+04	2.00E+06	0	0	0		
83	0734010	1	Kr-25	120	30	342	+/-0.5	21	5.80E+04	2.00E+06	0	0	0		
84	0734010	1	Kr-25	120	100	1100	+/-0.5	21	5.23E+04	2.00E+06	0	0	0		
85	0734010	1	Kr-25	80	0	26.25	+/-0.5	21	5.21E+04	2.00E+06	0	0	0		
86	0734010	1	Kr-25	80	30	500	+/-0.5	21	5.19E+04	2.00E+06	0	0	0		
87	0734010	1	Kr-25	80	100	1650	+/-0.5	21	5.40E+04	2.00E+06	0	0	0		
88	0734010	1	Kr-25	160	0	15	+/-0.5	21	5.14E+04	2.00E+06	0	0	0		
89	0734010	1	Kr-25	160	30	262.5	+/-0.5	21	5.11E+04	2.00E+06	0	0	0		
90	0734010	1	Kr-25	160	100	827.5	+/-0.5	21	5.39E+00	2.00E+06	0	0	0		
91	0734010	3	Kr-25	120	0	21.5	+/-0.5	21	4.81E+04	2.00E+06	0	0	0		
92	0734010	3	Kr-25	120	30	342	+/-0.5	21	4.90E+04	2.00E+06	0	0	0		
93	0734010	3	Kr-25	120	100	1100	+/-0.5	21	4.74E+04	2.00E+06	0	0	0		
94	0734010	3	Kr-25	80	0	27.5	+/-0.5	21	4.81E+04	2.00E+06	0	0	0		
95	0734010	3	Kr-25	80	30	501	+/-0.5	21	4.88E+04	2.00E+06	0	0	0		
96	0734010	3	Kr-25	80	100	1650	+/-0.5	21	5.07E+04	2.00E+06	0	0	0		
97	0734010	3	Kr-25	160	0	15	+/-0.5	21	5.20E+04	2.00E+06	0	0	0		
98	0734010	3	Kr-25	160	30	263.7	+/-0.5	21	4.97E+04	2.00E+06	0	0	0		
99	0734010	3	Kr-25	160	100	827.5	+/-0.5	21	4.85E+04	2.00E+06	0	0	0		
100	0734010	3	Kr-25	120	30	341	+/-0.5	21	4.43E+04	1.00E+07	0	0	0		
101	0734010	3	Kr-25	120	70	761	+/-0.5	21	4.34E+04	1.00E+07	0	0	0		
102	0734010	3	Kr-25	120	100	1110	+/-0.5	21	4.52E+04	1.00E+07	0	0	0		
103	0734010	2	Kr-25	120	30	341	+/-0.5	21	4.95E+04	1.00E+07	0	0	0		
104	0734010	2	Xe-25	120	0	21.5	+/-0.5	41.5	1.40E+04	1.00E+06	0	0	0		
105	0734010	2	Xe-25	120	30	342	+/-0.5	41.5	1.48E+04	1.00E+06	0	0	0		
106	0734010	2	Xe-25	120	100	1100	+/-0.5	41.5	1.50E+04	1.00E+06	0	0	0		
107	0734010	2	Xe-25	80	0	27.5	+/-0.5	41.5	1.47E+04	1.00E+06	0	0	0		
108	0734010	2	Xe-25	80	30	501	+/-0.5	41.5	1.41E+04	1.00E+06	0	0	0		

Appendix A – AFL12820SX/CH SEE Testing (Cont.)

Run #	DUT #	Location	Ion	Vin(V)	Load(%)	Iin(mA)	Vth	LET	Flux	Fluence	SET	DNF	SEL	SEB	Note
109	0734010	2	Xe-25	80	100	1650	+/-0.5	41.5	1.30E+04	1.00E+06	0	0	0		
110	0734010	2	Xe-25	160	0	16.3	+/-0.5	41.5	1.49E+04	1.00E+06	0	0	0		
111	0734010	2	Xe-25	160	30	263.7	+/-0.5	41.5	1.36E+04	1.00E+06	0	0	0		
112	0734010	2	Xe-25	160	100	826.3	+/-0.5	41.5	1.56E+04	1.00E+06	0	0	0		
113	0734010	2	Xe-25	120	0	22.5	+/-0.5	41.5	1.63E+04	1.00E+06	0	0	0		
114	0734010	2	Xe-25	120	30	342	+/-0.5	41.5	1.50E+04	1.00E+06	0	0	0		
115	0734010	2	Xe-25	120	100	1100	+/-0.5	41.5	1.83E+04	1.00E+06	0	0	0		
116	0734010	2	Xe-25	80	0	26.25	+/-0.5	41.5	1.65E+04	1.00E+06	0	0	0		
117	0734010	2	Xe-25	80	30	501	+/-0.5	41.5	1.53E+04	1.00E+06	0	0	0		
118	0734010	2	Xe-25	80	100	1650	+/-0.5	41.5	1.47E+04	1.00E+06	0	0	0		
119	0734010	2	Xe-25	160	0	16.3	+/-0.5	41.5	1.63E+04	1.00E+06	0	0	0		
120	0734010	2	Xe-25	160	30	263.7	+/-0.5	41.5	1.68E+04	1.00E+06	0	0	0		
121	0734010	2	Xe-25	160	100	826.3	+/-0.5	41.5	1.62E+04	1.00E+06	0	0	0		
122	0734010	3	Xe-25	120	0	20	+/-0.5	41.5	1.67E+04	1.00E+06	0	0	0		
123	0734010	3	Xe-25	120	30	342	+/-0.5	41.5	1.66E+04	1.00E+06	0	0	0		
124	0734010	3	Xe-25	120	70	765	+/-0.5	41.5	1.46E+04	7.60E+04	0	0	0	1	