TEST REPORT:
Radiation Evaluation of UC1708 Non-Inverting Power Driver

Stephen Buchner, QSS Group Inc.
&
Anthony Phan, MEI

12/18/06
NASA/GSFC

1. Introduction

This report describes the radiation testing and characterization of the UC1708 Dual Non-Inverting Power Driver from Texas Instruments. The test was performed in September 2006.

2. Device Description

Table I gives the relevant device and test information.

Table I.
Part and Test Information

Generic Part Number:	UC1708 (5962-0051401VPA)
Manufacturer:	Texas Instruments
Lot Date Code (LDC):	0224B
Quantity Tested:	5
Serial Numbers of Control Sample:	#5
Serial Numbers of Radiation Samples:	#1, #2, #3, and #4
Part Function:	Power Driver
Part Technology:	CMOS
Package Style:	DIL (8 pins)
Test Equipment:	Parametric Analyzer
Test Engineer:	Anthony Phan
Dose Levels (krad (Si))	0, 5, 10, 15, 20, 30, and 40
Target dose rate (rad (Si)/min)	2 rad(Si)/second

3. Test Method

Five devices were tested. Four devices were exposed under electrical bias to gamma rays from the NASA-GSFC Co^{60} source per MIL-STD-883 Method 1019.6. One device will be used as a control. The parts were biased as follows: Supply Voltage (V_{in})= 35V, outputs were left floating and inputs were grounded. After each exposure the devices were tested for functionality and the parametric values measured to determine whether they were within specifications.

Table II
Switching Characteristics
(See Fig. 1 for Setup Details.)

Unless otherwise stated, V_{IN}=10V to 35V, and these specifications apply for: –55°C<T_A<125°C for the UC1708, –25°C<T_A<85°C for the UC2708, and 0°C<T_A<70°C for the UC3708, T_A = T_J

PARAMETER		TEST CONDITIONS	MIN	TYP	MAX	UNIT
V_{IN}	Supply current	Outputs low		18	26	mA
		Outputs high		14	18	
		Enable = 0 V		1	4	
	A, B and shutdown inputs low level				0.8	V
	A, B and shutdown inputs high level		2.0			V
	A, B Input current low	$V_{A,B}$ = 0.4V	–1	–0.6		mA
	A, B Input current high	$V_{A,B}$ = 2.4V	–200		50	µA
	A, B Input leakage current high	$V_{A,B}$ = 35.3V			200	µA
	Shutdown input current low	$V_{SHUTDOWN}$ = 0.4V		20	100	µA
	Shutdown input current high	$V_{SHUTDOWN}$ = 2.4V		170	500	µA
		$V_{SHUTDOWN}$ = 6.2V		0.6	1.5	mA
	Enable input current low	V_{ENABLE} = 0V	–600	–460	200	µA
	Enable input current high	V_{ENABLE} = 6.2V			200	µA
	Enable threshold rising			2.8	3.6	V
	Enable threshold falling		1.0	2.4	3.4	V
V_{IN}–V_{OUT}	Output High Saturation	I_{OUT} = –50mA			2.0	V
		I_{OUT} = –500mA			2.5	V
V_{OUT}	Output Low Saturation	I_{OUT} = 50mA			0.5	V
		I_{OUT} = 500mA			2.5	V
	Thermal Shutdown			155		°C

(VIN = 20V, delays measured to 10% output change.)

PARAMETER	TEST CONDITIONS		MIN	TYP	MAX	UNIT
FROM A,B INPUT TO OUTPUT:						
Rise Time Delay (TPLH)	CL = 0pF			25	40	ns
	CL = 1000pF	UC1708		25	45	ns
		UC2708/UC3708		25	40	
	CL = 2200pF	UC1708		25	50	ns
		UC2708/UC3708		25	45	
10% to 90% Rise (TTLH)	CL = 0pF			55	75	ns
	CL = 1000pF (1)	UC1708		25	80	ns
		UC2708/UC3708		25	50	
	CL = 2200pF	UC1708		40	85	ns
		UC2708/UC3708		40	55	
Fall Time Delay (TPHL)	CL = 0pF			25	40	ns
	CL = 1000pF (1)			25	45	
	CL = 2200pF			35	50	
90% to 10% Fall (TTHL)	CL = 0pF			15	20	ns
	CL = 1000pF (1)			25	45	
	CL = 2200pF			40	55	

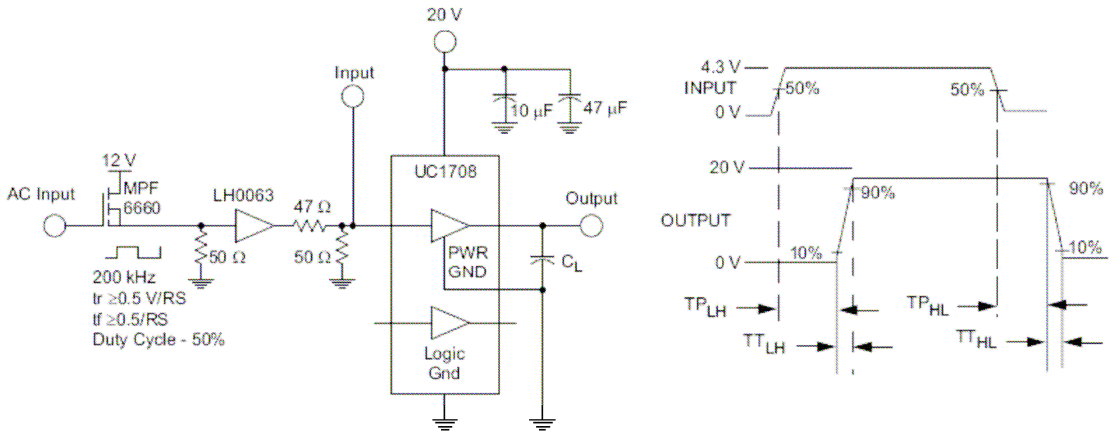

Figure 1. AC Test Circuit and Switching Time Waveforms

Table III
Iin, VHsat and ICCH for DUT1 Channel A for High and Low Outputs

	DUT1A High				DUT1A Low			
TID	**VCC**	**IIN**	**VHSAT**	**ICCH**	**VOUT**	**VCC**	**IIN**	**ICCL**
0	1.00E+01	6.26E-10	1.48E+00	1.49E-02	3.05E-01	1.00E+01	-5.11E-04	1.78E-02
	1.50E+01	6.44E-10	1.48E+00	1.54E-02	3.03E-01	1.50E+01	-5.13E-04	1.83E-02
	2.00E+01	6.92E-10	1.47E+00	1.58E-02	3.00E-01	2.00E+01	-5.14E-04	1.87E-02
5	1.00E+01	5.62E-10	1.48E+00	1.48E-02	3.06E-01	1.00E+01	-5.06E-04	1.77E-02
	1.50E+01	5.66E-10	1.48E+00	1.53E-02	3.04E-01	1.50E+01	-5.08E-04	1.81E-02
	2.00E+01	6.24E-10	1.48E+00	1.58E-02	3.02E-01	2.00E+01	-5.09E-04	1.85E-02
10	1.00E+01	4.16E-10	1.51E+00	1.49E-02	3.11E-01	1.00E+01	-5.15E-04	1.77E-02
	1.50E+01	4.53E-10	1.50E+00	1.54E-02	3.09E-01	1.50E+01	-5.17E-04	1.81E-02
	2.00E+01	4.85E-10	1.50E+00	1.59E-02	3.06E-01	2.00E+01	-5.18E-04	1.85E-02
15	1.00E+01	3.97E-10	1.51E+00	1.49E-02	3.14E-01	1.00E+01	-5.15E-04	1.75E-02
	1.50E+01	4.45E-10	1.51E+00	1.54E-02	3.12E-01	1.50E+01	-5.18E-04	1.80E-02
	2.00E+01	4.72E-10	1.50E+00	1.59E-02	3.09E-01	2.00E+01	-5.19E-04	1.84E-02
20	1.00E+01	4.47E-10	1.50E+00	1.49E-02	3.15E-01	1.00E+01	-5.13E-04	1.74E-02
	1.50E+01	4.96E-10	1.50E+00	1.54E-02	3.12E-01	1.50E+01	-5.15E-04	1.78E-02
	2.00E+01	5.22E-10	1.50E+00	1.58E-02	3.10E-01	2.00E+01	-5.16E-04	1.83E-02
30	1.00E+01	3.23E-10	1.05E+00	1.49E-02	3.18E-01	1.00E+01	-5.10E-04	1.71E-02
	1.50E+01	3.56E-10	1.22E+00	1.54E-02	3.15E-01	1.50E+01	-5.13E-04	1.75E-02
	2.00E+01	3.85E-10	1.31E+00	1.58E-02	3.13E-01	2.00E+01	-5.14E-04	1.80E-02
40	1.00E+01	2.58E-05	1.08E+01	-1.39E-02	3.17E-01	1.00E+01	-5.07E-04	1.71E-02
	1.50E+01	4.39E-10	1.52E+00	1.53E-02	3.15E-01	1.50E+01	-5.10E-04	1.76E-02
	2.00E+01	4.12E-10	1.52E+00	1.58E-02	3.12E-01	2.00E+01	-5.11E-04	1.80E-02
Anneal	1.00E+01	3.89E-10	1.52E+00	1.49E-02	3.14E-01	1.00E+01	-5.10E-04	1.75E-02
	1.50E+01	4.56E-10	1.51E+00	1.55E-02	3.11E-01	1.50E+01	-5.12E-04	1.79E-02
	2.00E+01	4.19E-10	1.51E+00	1.59E-02	3.09E-01	2.00E+01	-5.14E-04	1.83E-02

Table IV
I_{in}, VH_{sat} and I_{CCH} for DUT1 Channel B for High and Low Outputs

	DUT1B High				DUT1B Low			
TID	VCC	IIN	VHSAT	ICCH	VOUT	VCC	IIN	ICCL
0	1.00E+01	2.99E-10	1.48E+00	1.51E-02	3.07E-01	1.00E+01	-5.08E-04	1.78E-02
	1.50E+01	2.36E-10	1.47E+00	1.56E-02	3.05E-01	1.50E+01	-5.11E-04	1.82E-02
	2.00E+01	2.85E-10	1.47E+00	1.61E-02	3.03E-01	2.00E+01	-5.12E-04	1.86E-02
5	1.00E+01	2.61E-10	1.49E+00	1.51E-02	3.09E-01	1.00E+01	-5.05E-04	1.77E-02
	1.50E+01	2.00E-10	1.48E+00	1.56E-02	3.07E-01	1.50E+01	-5.08E-04	1.81E-02
	2.00E+01	2.39E-10	1.48E+00	1.61E-02	3.05E-01	2.00E+01	-5.10E-04	1.85E-02
10	1.00E+01	1.53E-10	1.51E+00	1.52E-02	3.13E-01	1.00E+01	-5.13E-04	1.77E-02
	1.50E+01	1.63E-10	1.51E+00	1.57E-02	3.11E-01	1.50E+01	-5.15E-04	1.81E-02
	2.00E+01	1.79E-10	1.50E+00	1.62E-02	3.09E-01	2.00E+01	-5.17E-04	1.85E-02
15	1.00E+01	1.41E-10	1.52E+00	1.51E-02	3.16E-01	1.00E+01	-5.14E-04	1.75E-02
	1.50E+01	1.50E-10	1.52E+00	1.57E-02	3.14E-01	1.50E+01	-5.17E-04	1.80E-02
	2.00E+01	1.64E-10	1.51E+00	1.62E-02	3.11E-01	2.00E+01	-5.19E-04	1.84E-02
20	1.00E+01	1.58E-10	1.52E+00	1.51E-02	3.17E-01	1.00E+01	-5.12E-04	1.74E-02
	1.50E+01	1.68E-10	1.52E+00	1.57E-02	3.14E-01	1.50E+01	-5.15E-04	1.79E-02
	2.00E+01	1.83E-10	1.51E+00	1.61E-02	3.12E-01	2.00E+01	-5.17E-04	1.83E-02
25	1.00E+01	2.63E-05	1.08E+01	-1.42E-02	3.20E-01	1.00E+01	-5.10E-04	1.71E-02
	1.50E+01	2.55E-05	1.58E+01	-1.34E-02	3.17E-01	1.50E+01	-5.12E-04	1.75E-02
	2.00E+01	2.50E-05	2.08E+01	-1.26E-02	3.15E-01	2.00E+01	-5.14E-04	1.80E-02
30	1.00E+01	2.59E-05	1.08E+01	-1.38E-02	3.19E-01	1.00E+01	-5.04E-04	1.71E-02
	1.50E+01	2.51E-05	1.58E+01	-1.30E-02	3.16E-01	1.50E+01	-5.07E-04	1.75E-02
	2.00E+01	2.36E-10	1.51E+00	1.60E-02	3.14E-01	2.00E+01	-5.09E-04	1.80E-02
Anneal	1.00E+01	1.90E-10	1.52E+00	1.52E-02	3.15E-01	1.00E+01	-5.08E-04	1.75E-02
	1.50E+01	1.73E-10	1.51E+00	1.57E-02	3.13E-01	1.50E+01	-5.11E-04	1.79E-02
	2.00E+01	1.33E-10	1.51E+00	1.62E-02	3.11E-01	2.00E+01	-5.12E-04	1.83E-02

Table V
I_{in}, VH_{sat} and I_{CCH} for DUT2 Channel A for High and Low Outputs

	DUT2A High				DUT2A Low			
TID	VCC	IIN	VHSAT	ICCH	VOUT	VCC	IIN	ICCL
0	1.00E+01	6.42E-10	1.48E+00	1.48E-02	3.03E-01	1.00E+01	-4.95E-04	1.79E-02
	1.50E+01	6.89E-10	1.48E+00	1.54E-02	3.00E-01	1.50E+01	-4.97E-04	1.84E-02
	2.00E+01	7.31E-10	1.48E+00	1.58E-02	2.98E-01	2.00E+01	-4.98E-04	1.88E-02
5	1.00E+01	6.09E-10	1.48E+00	1.48E-02	3.05E-01	1.00E+01	-4.95E-04	1.78E-02
	1.50E+01	6.27E-10	1.48E+00	1.53E-02	3.03E-01	1.50E+01	-4.97E-04	1.83E-02
	2.00E+01	6.76E-10	1.48E+00	1.58E-02	3.00E-01	2.00E+01	-4.98E-04	1.87E-02
10	1.00E+01	4.62E-10	1.51E+00	1.49E-02	3.11E-01	1.00E+01	-5.02E-04	1.77E-02
	1.50E+01	4.87E-10	1.51E+00	1.54E-02	3.09E-01	1.50E+01	-5.04E-04	1.82E-02
	2.00E+01	5.25E-10	1.51E+00	1.58E-02	3.06E-01	2.00E+01	-5.05E-04	1.86E-02
15	1.00E+01	4.10E-10	1.52E+00	1.49E-02	3.14E-01	1.00E+01	-5.03E-04	1.76E-02
	1.50E+01	4.46E-10	1.52E+00	1.54E-02	3.12E-01	1.50E+01	-5.05E-04	1.80E-02
	2.00E+01	4.97E-10	1.51E+00	1.58E-02	3.09E-01	2.00E+01	-5.07E-04	1.84E-02
20	1.00E+01	4.65E-10	1.51E+00	1.48E-02	3.15E-01	1.00E+01	-5.00E-04	1.74E-02
	1.50E+01	5.12E-10	1.51E+00	1.53E-02	3.12E-01	1.50E+01	-5.02E-04	1.79E-02
	2.00E+01	5.44E-10	1.50E+00	1.58E-02	3.09E-01	2.00E+01	-5.03E-04	1.83E-02
30	1.00E+01	2.28E-05	1.08E+01	-1.56E-02	3.19E-01	1.00E+01	-4.97E-04	1.70E-02
	1.50E+01	2.21E-05	1.58E+01	-1.48E-02	3.16E-01	1.50E+01	-5.00E-04	1.75E-02
	2.00E+01	2.16E-05	2.08E+01	-1.42E-02	3.13E-01	2.00E+01	-5.01E-04	1.79E-02
40	1.00E+01	2.38E-05	1.08E+01	-1.77E-02	3.24E-01	1.00E+01	-4.95E-04	1.64E-02
	1.50E+01	2.31E-05	1.58E+01	-1.70E-02	3.21E-01	1.50E+01	-4.97E-04	1.69E-02
	2.00E+01	2.26E-05	2.08E+01	-1.63E-02	3.18E-01	2.00E+01	-4.98E-04	1.74E-02
Anneal	1.00E+01	2.39E-05	1.08E+01	-1.70E-02	3.22E-01	1.00E+01	-4.95E-04	1.66E-02
	1.50E+01	2.31E-05	1.58E+01	-1.63E-02	3.19E-01	1.50E+01	-4.98E-04	1.72E-02
	2.00E+01	2.26E-05	2.08E+01	-1.56E-02	3.16E-01	2.00E+01	-4.99E-04	1.76E-02

Table VI
Iin, VHsat and ICCH for DUT2 Channel B for High and Low Outputs

	DUT2B High				DUT2B Low			
TID	VCC	IIN	VHSAT	ICCH	VOUT	VCC	IIN	ICCL
0	1.00E+01	2.43E-10	1.49E+00	1.52E-02	3.08E-01	1.00E+01	-4.96E-04	1.79E-02
	1.50E+01	2.10E-10	1.49E+00	1.58E-02	3.06E-01	1.50E+01	-4.99E-04	1.84E-02
	2.00E+01	1.96E-10	1.48E+00	1.62E-02	3.03E-01	2.00E+01	-5.00E-04	1.88E-02
5	1.00E+01	2.97E-10	1.48E+00	1.52E-02	3.23E-01	1.00E+01	-4.97E-04	1.78E-02
	1.50E+01	2.40E-10	1.48E+00	1.57E-02	3.21E-01	1.50E+01	-4.99E-04	1.82E-02
	2.00E+01	2.79E-10	1.48E+00	1.62E-02	3.19E-01	2.00E+01	-5.00E-04	1.86E-02
10	1.00E+01	1.73E-10	1.51E+00	1.52E-02	3.14E-01	1.00E+01	-5.01E-04	1.77E-02
	1.50E+01	1.84E-10	1.51E+00	1.57E-02	3.11E-01	1.50E+01	-5.04E-04	1.82E-02
	2.00E+01	2.00E-10	1.50E+00	1.62E-02	3.09E-01	2.00E+01	-5.05E-04	1.86E-02
15	1.00E+01	1.54E-10	1.52E+00	1.52E-02	3.17E-01	1.00E+01	-5.03E-04	1.76E-02
	1.50E+01	1.63E-10	1.52E+00	1.57E-02	3.14E-01	1.50E+01	-5.06E-04	1.80E-02
	2.00E+01	1.77E-10	1.52E+00	1.62E-02	3.12E-01	2.00E+01	-5.08E-04	1.84E-02
20	1.00E+01	1.79E-10	1.52E+00	1.51E-02	3.18E-01	1.00E+01	-5.01E-04	1.74E-02
	1.50E+01	1.91E-10	1.52E+00	1.57E-02	3.15E-01	1.50E+01	-5.04E-04	1.79E-02
	2.00E+01	2.06E-10	1.51E+00	1.62E-02	3.13E-01	2.00E+01	-5.05E-04	1.83E-02
30	1.00E+01	2.86E-05	1.09E+01	-1.49E-02	3.21E-01	1.00E+01	-4.97E-04	1.70E-02
	1.50E+01	2.78E-05	1.58E+01	-1.41E-02	3.19E-01	1.50E+01	-5.00E-04	1.75E-02
	2.00E+01	2.71E-05	2.08E+01	-1.34E-02	3.16E-01	2.00E+01	-5.02E-04	1.79E-02
40	1.00E+01	2.97E-05	1.09E+01	-1.70E-02	3.26E-01	1.00E+01	-4.96E-04	1.64E-02
	1.50E+01	2.88E-05	1.59E+01	-1.63E-02	3.24E-01	1.50E+01	-4.99E-04	1.69E-02
	2.00E+01	2.82E-05	2.08E+01	-1.56E-02	3.21E-01	2.00E+01	-5.01E-04	1.74E-02
Anneal	1.00E+01	2.95E-05	1.09E+01	-1.64E-02	3.24E-01	1.00E+01	-4.95E-04	1.66E-02
	1.50E+01	2.86E-05	1.59E+01	-1.56E-02	3.21E-01	1.50E+01	-4.98E-04	1.71E-02
	2.00E+01	2.80E-05	2.08E+01	-1.49E-02	3.18E-01	2.00E+01	-5.00E-04	1.76E-02

Table VII
I_{in}, VH_{sat} and I_{CCH} for DUT3 Channel A for High and Low Outputs

	DUT3A High				DUT3A Low			
TID	VCC	IIN	VHSAT	ICCH	VOUT	VCC	IIN	ICCL
0	1.00E+01	5.80E-10	1.49E+00	1.49E-02	3.04E-01	1.00E+01	-5.04E-04	1.80E-02
	1.50E+01	6.10E-10	1.49E+00	1.54E-02	3.01E-01	1.50E+01	-5.06E-04	1.85E-02
	2.00E+01	6.34E-10	1.48E+00	1.59E-02	2.98E-01	2.00E+01	-5.07E-04	1.89E-02
5	1.00E+01	5.79E-10	1.49E+00	1.49E-02	3.05E-01	1.00E+01	-5.02E-04	1.79E-02
	1.50E+01	5.86E-10	1.49E+00	1.54E-02	3.03E-01	1.50E+01	-5.04E-04	1.83E-02
	2.00E+01	6.44E-10	1.48E+00	1.58E-02	3.00E-01	2.00E+01	-5.05E-04	1.87E-02
10	1.00E+01	4.34E-10	1.51E+00	1.50E-02	3.11E-01	1.00E+01	-5.09E-04	1.78E-02
	1.50E+01	4.65E-10	1.51E+00	1.55E-02	3.08E-01	1.50E+01	-5.12E-04	1.83E-02
	2.00E+01	4.96E-10	1.51E+00	1.59E-02	3.06E-01	2.00E+01	-5.13E-04	1.87E-02
15	1.00E+01	4.06E-10	1.52E+00	1.49E-02	3.14E-01	1.00E+01	-5.11E-04	1.76E-02
	1.50E+01	4.28E-10	1.52E+00	1.55E-02	3.12E-01	1.50E+01	-5.13E-04	1.81E-02
	2.00E+01	4.49E-10	1.52E+00	1.59E-02	3.09E-01	2.00E+01	-5.14E-04	1.85E-02
20	1.00E+01	4.21E-10	1.52E+00	1.49E-02	3.14E-01	1.00E+01	-5.07E-04	1.75E-02
	1.50E+01	4.50E-10	1.52E+00	1.54E-02	3.12E-01	1.50E+01	-5.09E-04	1.80E-02
	2.00E+01	4.95E-10	1.51E+00	1.59E-02	3.09E-01	2.00E+01	-5.11E-04	1.84E-02
30	1.00E+01	2.29E-05	1.08E+01	-1.43E-02	3.17E-01	1.00E+01	-5.05E-04	1.73E-02
	1.50E+01	2.23E-05	1.58E+01	-1.35E-02	3.14E-01	1.50E+01	-5.08E-04	1.78E-02
	2.00E+01	4.77E-10	1.52E+00	1.59E-02	3.11E-01	2.00E+01	-5.09E-04	1.82E-02
40	1.00E+01	2.47E-05	1.08E+01	-1.69E-02	3.22E-01	1.00E+01	-5.02E-04	1.67E-02
	1.50E+01	2.40E-05	1.58E+01	-1.62E-02	3.19E-01	1.50E+01	-5.04E-04	1.72E-02
	2.00E+01	2.35E-05	2.08E+01	-1.55E-02	3.16E-01	2.00E+01	-5.06E-04	1.77E-02
Anneal	1.00E+01	2.49E-05	1.08E+01	-1.65E-02	3.20E-01	1.00E+01	-5.01E-04	1.69E-02
	1.50E+01	2.42E-05	1.58E+01	-1.57E-02	3.17E-01	1.50E+01	-5.04E-04	1.74E-02
	2.00E+01	2.38E-05	2.08E+01	-1.50E-02	3.14E-01	2.00E+01	-5.05E-04	1.78E-02

Table VIII
I_{in}, VH_{sat} and I_{CCH} for DUT3 Channel B for High and Low Outputs

	DUT3B High				DUT3B Low			
TID	VCC	IIN	VHSAT	ICCH	VOUT	VCC	IIN	ICCL
0	1.00E+01	2.33E-10	1.49E+00	1.52E-02	3.08E-01	1.00E+01	-5.05E-04	1.80E-02
	1.50E+01	1.70E-10	1.49E+00	1.58E-02	3.06E-01	1.50E+01	-5.08E-04	1.85E-02
	2.00E+01	2.16E-10	1.48E+00	1.63E-02	3.04E-01	2.00E+01	-5.09E-04	1.89E-02
5	1.00E+01	2.90E-10	1.48E+00	1.52E-02	3.13E-01	1.00E+01	-5.04E-04	1.79E-02
	1.50E+01	2.27E-10	1.48E+00	1.57E-02	3.11E-01	1.50E+01	-5.07E-04	1.83E-02
	2.00E+01	2.78E-10	1.48E+00	1.62E-02	3.09E-01	2.00E+01	-5.08E-04	1.87E-02
10	1.00E+01	1.62E-10	1.51E+00	1.52E-02	3.15E-01	1.00E+01	-5.12E-04	1.78E-02
	1.50E+01	1.73E-10	1.51E+00	1.58E-02	3.12E-01	1.50E+01	-5.15E-04	1.83E-02
	2.00E+01	1.88E-10	1.51E+00	1.63E-02	3.10E-01	2.00E+01	-5.17E-04	1.87E-02
15	1.00E+01	1.41E-10	1.53E+00	1.52E-02	3.17E-01	1.00E+01	-5.12E-04	1.77E-02
	1.50E+01	1.52E-10	1.52E+00	1.57E-02	3.15E-01	1.50E+01	-5.15E-04	1.81E-02
	2.00E+01	1.66E-10	1.52E+00	1.62E-02	3.13E-01	2.00E+01	-5.17E-04	1.85E-02
20	1.00E+01	1.74E-10	1.52E+00	1.52E-02	3.18E-01	1.00E+01	-5.08E-04	1.75E-02
	1.50E+01	1.83E-10	1.52E+00	1.57E-02	3.15E-01	1.50E+01	-5.11E-04	1.80E-02
	2.00E+01	1.98E-10	1.52E+00	1.62E-02	3.13E-01	2.00E+01	-5.13E-04	1.84E-02
30	1.00E+01	2.33E-05	1.09E+01	-1.41E-02	3.20E-01	1.00E+01	-5.07E-04	1.73E-02
	1.50E+01	2.26E-05	1.58E+01	-1.32E-02	3.17E-01	1.50E+01	-5.10E-04	1.78E-02
	2.00E+01	2.01E-10	1.52E+00	1.62E-02	3.15E-01	2.00E+01	-5.12E-04	1.82E-02
40	1.00E+01	2.46E-05	1.09E+01	-1.66E-02	3.25E-01	1.00E+01	-5.04E-04	1.67E-02
	1.50E+01	2.39E-05	1.59E+01	-1.58E-02	3.22E-01	1.50E+01	-5.07E-04	1.72E-02
	2.00E+01	2.35E-05	2.08E+01	-1.51E-02	3.20E-01	2.00E+01	-5.09E-04	1.77E-02
Anneal	1.00E+01	2.48E-05	1.09E+01	-1.62E-02	3.23E-01	1.00E+01	-5.03E-04	1.69E-02
	1.50E+01	2.41E-05	1.58E+01	-1.53E-02	3.20E-01	1.50E+01	-5.06E-04	1.74E-02
	2.00E+01	2.36E-05	2.08E+01	-1.46E-02	3.18E-01	2.00E+01	-5.08E-04	1.78E-02

Table IX
I_{in}, VH_{sat} and I_{CCH} for DUT4 Channel A for High and Low Outputs

	DUT4A High				DUT4A Low			
TID	VCC	IIN	VHSAT	ICCH	VOUT	VCC	IIN	ICCL
0	1.00E+01	5.82E-10	1.49E+00	1.48E-02	3.01E-01	1.00E+01	-5.06E-04	1.79E-02
	1.50E+01	6.16E-10	1.49E+00	1.53E-02	2.99E-01	1.50E+01	-5.08E-04	1.84E-02
	2.00E+01	6.44E-10	1.48E+00	1.58E-02	2.96E-01	2.00E+01	-5.09E-04	1.88E-02
5	1.00E+01	5.57E-10	1.48E+00	1.48E-02	3.04E-01	1.00E+01	-5.03E-04	1.78E-02
	1.50E+01	5.69E-10	1.48E+00	1.53E-02	3.01E-01	1.50E+01	-5.05E-04	1.83E-02
	2.00E+01	6.10E-10	1.48E+00	1.58E-02	2.98E-01	2.00E+01	-5.06E-04	1.87E-02
10	1.00E+01	4.05E-10	1.51E+00	1.49E-02	3.09E-01	1.00E+01	-5.11E-04	1.78E-02
	1.50E+01	4.44E-10	1.51E+00	1.54E-02	3.06E-01	1.50E+01	-5.14E-04	1.82E-02
	2.00E+01	4.77E-10	1.51E+00	1.59E-02	3.03E-01	2.00E+01	-5.15E-04	1.87E-02
15	1.00E+01	3.95E-10	1.51E+00	1.48E-02	3.11E-01	1.00E+01	-5.10E-04	1.76E-02
	1.50E+01	4.20E-10	1.51E+00	1.54E-02	3.08E-01	1.50E+01	-5.12E-04	1.81E-02
	2.00E+01	4.63E-10	1.51E+00	1.58E-02	3.05E-01	2.00E+01	-5.13E-04	1.85E-02
20	1.00E+01	3.84E-10	1.52E+00	1.48E-02	3.13E-01	1.00E+01	-5.10E-04	1.74E-02
	1.50E+01	4.23E-10	1.52E+00	1.53E-02	3.10E-01	1.50E+01	-5.12E-04	1.79E-02
	2.00E+01	4.62E-10	1.51E+00	1.58E-02	3.07E-01	2.00E+01	-5.13E-04	1.84E-02
30	1.00E+01	2.58E-05	1.08E+01	-1.53E-02	3.18E-01	1.00E+01	-5.06E-04	1.69E-02
	1.50E+01	2.50E-05	1.58E+01	-1.45E-02	3.15E-01	1.50E+01	-5.08E-04	1.74E-02
	2.00E+01	2.45E-05	2.08E+01	-1.39E-02	3.12E-01	2.00E+01	-5.10E-04	1.79E-02
40	1.00E+01	2.47E-05	1.08E+01	-1.42E-02	3.15E-01	1.00E+01	-5.03E-04	1.71E-02
	1.50E+01	4.67E-10	1.51E+00	1.52E-02	3.12E-01	1.50E+01	-5.06E-04	1.76E-02
	2.00E+01	4.58E-10	1.51E+00	1.57E-02	3.10E-01	2.00E+01	-5.07E-04	1.81E-02
Anneal	1.00E+01	3.79E-10	1.52E+00	1.49E-02	3.12E-01	1.00E+01	-5.07E-04	1.76E-02
	1.50E+01	4.03E-10	1.52E+00	1.54E-02	3.09E-01	1.50E+01	-5.10E-04	1.80E-02
	2.00E+01	4.27E-10	1.52E+00	1.59E-02	3.06E-01	2.00E+01	-5.11E-04	1.85E-02

Table X
I_{in}, VH_{sat} and I_{CCH} for DUT4 Channel B for High and Low Outputs

	DUT4B High				DUT4B Low			
TID	VCC	IIN	VHSAT	ICCH	VOUT	VCC	IIN	ICCL
0	1.00E+01	2.46E-10	1.49E+00	1.53E-02	3.08E-01	1.00E+01	-5.07E-04	1.79E-02
	1.50E+01	2.12E-10	1.49E+00	1.59E-02	3.05E-01	1.50E+01	-5.10E-04	1.84E-02
	2.00E+01	2.30E-10	1.48E+00	1.64E-02	3.03E-01	2.00E+01	-5.11E-04	1.88E-02
5	1.00E+01	3.13E-10	1.48E+00	1.52E-02	3.08E-01	1.00E+01	-5.03E-04	1.78E-02
	1.50E+01	2.75E-10	1.48E+00	1.58E-02	3.06E-01	1.50E+01	-5.06E-04	1.83E-02
	2.00E+01	3.10E-10	1.48E+00	1.63E-02	3.04E-01	2.00E+01	-5.08E-04	1.87E-02
10	1.00E+01	1.54E-10	1.52E+00	1.53E-02	3.13E-01	1.00E+01	-5.12E-04	1.78E-02
	1.50E+01	1.70E-10	1.51E+00	1.59E-02	3.11E-01	1.50E+01	-5.15E-04	1.82E-02
	2.00E+01	1.86E-10	1.51E+00	1.64E-02	3.09E-01	2.00E+01	-5.17E-04	1.87E-02
15	1.00E+01	1.48E-10	1.52E+00	1.53E-02	3.16E-01	1.00E+01	-5.14E-04	1.76E-02
	1.50E+01	1.57E-10	1.52E+00	1.58E-02	3.14E-01	1.50E+01	-5.17E-04	1.81E-02
	2.00E+01	1.71E-10	1.52E+00	1.63E-02	3.11E-01	2.00E+01	-5.18E-04	1.85E-02
20	1.00E+01	1.73E-10	1.52E+00	1.52E-02	3.17E-01	1.00E+01	-5.11E-04	1.74E-02
	1.50E+01	1.96E-10	1.52E+00	1.58E-02	3.15E-01	1.50E+01	-5.14E-04	1.79E-02
	2.00E+01	1.95E-10	1.52E+00	1.63E-02	3.12E-01	2.00E+01	-5.16E-04	1.84E-02
30	1.00E+01	2.60E-05	1.09E+01	-1.49E-02	3.22E-01	1.00E+01	-5.08E-04	1.69E-02
	1.50E+01	2.52E-05	1.58E+01	-1.41E-02	3.19E-01	1.50E+01	-5.11E-04	1.74E-02
	2.00E+01	2.47E-05	2.08E+01	-1.34E-02	3.17E-01	2.00E+01	-5.13E-04	1.79E-02
40	1.00E+01	2.53E-05	1.08E+01	-1.39E-02	3.20E-01	1.00E+01	-5.06E-04	1.71E-02
	1.50E+01	2.45E-05	1.58E+01	-1.31E-02	3.17E-01	1.50E+01	-5.09E-04	1.76E-02
	2.00E+01	2.46E-10	1.51E+00	1.62E-02	3.15E-01	2.00E+01	-5.11E-04	1.81E-02
Anneal	1.00E+01	1.93E-10	1.52E+00	1.53E-02	3.16E-01	1.00E+01	-5.07E-04	1.76E-02
	1.50E+01	2.02E-10	1.52E+00	1.59E-02	3.13E-01	1.50E+01	-5.10E-04	1.80E-02
	2.00E+01	2.19E-10	1.52E+00	1.64E-02	3.11E-01	2.00E+01	-5.12E-04	1.85E-02

Table XI
Rise Time Delay (ns) as a function of Total Ionizing Dose for four parts

Rise Time Delay (ns)										
TID	1A	1B	2A	2B	3A	3B	4A	4B	Average	St. Dev.
0	28.50	24.50	30.50	25.00	29.00	25.00	29.50	25.50	27.19	2.42
5	29.50	25.00	30.00	26.50	29.50	25.50	29.50	26.00	27.69	2.12
10	29.50	25.50	30.00	26.50	30.50	25.00	30.00	25.50	27.81	2.39
15	30.50	25.50	29.50	25.00	30.00	25.50	29.00	25.00	27.50	2.45
20	30.00	26.00	31.50	26.50	30.50	26.00	30.00	25.50	28.25	2.46
30	30.00	26.00	30.00	26.50	31.50	26.00	30.50	26.50	28.38	2.33
40	31.50	25.50	32.50	27.00	32.50	27.00	30.50	25.50	29.00	3.06
Post Anneal	30.00	25.00	31.50	26.00	30.00	26.00	29.50	25.00	27.88	2.63

Table XII
Rise Time (ns) as a function of Total Ionizing Dose for four parts.

Rise Time (ns)										
TID	1A	1B	2A	2B	3A	3B	4A	4B	Average	St. Dev.
0	30.87	32.00	31.10	32.06	30.07	31.80	29.30	30.10	30.91	1.02
5	31.57	32.32	30.50	31.69	30.22	32.04	30.45	33.56	31.54	1.13
10	31.89	32.54	31.78	33.10	31.62	33.33	30.80	33.66	32.34	0.98
15	32.20	34.06	32.40	34.56	32.60	34.71	31.98	35.25	33.47	1.31
20	33.24	34.90	33.80	35.40	33.49	35.07	32.80	35.45	34.27	1.05
30	34.60	37.20	35.35	37.60	34.08	35.10	34.90	39.04	35.98	1.75
40	34.08	36.10	38.33	39.87	37.09	39.66	33.10	35.50	36.72	2.49
Post Anneal	31.23	32.21	37.32	40.10	31.18	39.20	30.50	32.22	34.25	3.95

Table XIII
Fall Time Delay (ns) as a function of Total Ionizing Dose for four parts.

Fall Time Delay (ns)										
TID	1A	1B	2A	2B	3A	3B	4A	4B	Average	St. Dev.
0	21.50	20.00	20.50	20.00	20.00	19.50	21.00	20.00	20.31	0.65
5	20.00	18.50	19.50	19.50	20.00	19.50	19.50	20.00	19.56	0.50
10	20.00	19.00	19.00	19.50	20.00	19.00	19.00	19.50	19.38	0.44
15	18.50	19.50	20.00	18.50	19.00	19.00	20.00	18.50	19.13	0.64
20	18.00	19.50	18.50	18.50	19.00	19.00	19.50	18.50	18.81	0.53
30	19.50	19.50	19.50	19.50	19.00	18.50	19.00	19.50	19.25	0.38
40	19.00	19.00	18.50	18.50	19.50	18.50	19.00	19.50	18.94	0.42
Post Anneal	19.50	19.25	21.00	19.50	20.00	19.50	20.50	19.00	19.78	0.67

Table XIV
Fall Time (ns) as a Function of Fotal Ionzing Dose for four parts.

Fall Time (ns)										
TID	1A	1B	2A	2B	3A	3B	4A	4B	Average	St. Dev.
0	11.46	11.16	11.79	11.29	11.39	11.63	11.15	11.25	11.39	0.23
5	10.72	10.31	10.48	10.83	10.90	10.22	10.45	11.11	10.63	0.31
10	10.79	10.59	10.96	11.01	10.95	10.95	10.76	10.97	10.87	0.15
15	11.09	10.98	10.45	10.79	10.89	10.64	10.89	11.29	10.88	0.26
20	10.68	10.97	10.87	10.81	10.53	10.53	10.76	10.91	10.76	0.17
30	10.80	10.36	10.76	10.43	10.87	10.20	10.61	10.59	10.58	0.23
40	10.39	10.39	10.79	10.76	10.45	10.47	10.33	10.39	10.50	0.18
41	10.14	10.04	10.47	10.12	10.36	10.25	9.79	10.12	10.16	0.21

4. Conclusion

All parts passed all electrical parametric specifications up to 40 krads.