Total Ionizing Dose Test of TL431 Programmable Shunt Regulator from Texas Instruments.

Stephen Buchner, QSS Group Inc.

Jim Forney, MEI

Hak Kim, MEI

Goddard Space Flight Center
NASA

Report Date: 011/16/06

1. Introduction

A radiation evaluation was performed on TL431 to determine its total dose tolerance. The testing was carried out during July 2006.

The total dose testing was performed using a Co^{60} gamma ray source. Five parts were irradiated under bias. One part was used as a control sample. The total dose radiation levels were 5, 10, 15, 18.5, 21, 30, 40 and 50 krad(Si). The target dose rate was approximately 20 mrads/sec.

Initial electrical measurements were made on 6 samples. After each radiation exposure, parts were electrically tested according to the test conditions in Fig. 1. The values of the resistors were chosen to match those of the specific application for which the device is intended.

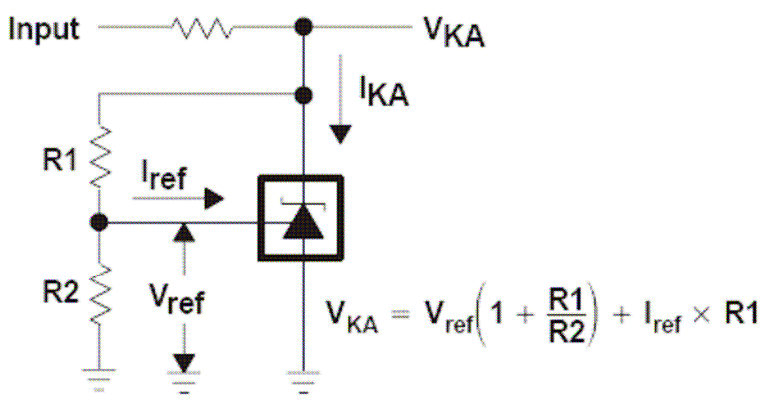

Fig. 1. Test Circuit with R = 180 Ω, R1 = 10 kΩ, and R2 = 6.8 kΩ.

2. Part Information

Table 1.
Part and Test Information

Part Number:	TL431
Manufacturer:	Texas Instruments
Lot Date Code (LDC):	Not available as delivered parts were chips subsequently packaged at NASA-GSFC for testing.
Quantity Tested:	6
Serial Numbers of Control Sample:	6
Serial Numbers of Radiation Samples:	1, 2, 3, 4,5
Part Function:	Programmable Shunt Regulator
Part Technology:	Bipolar
Package Style:	Die packaged at GSFC in TO5 can
Test Equipment:	Parametric analyzer, power supply
Test Engineer:	J. Forney
Case markings:	None

3. Results

Table II
V_{KA} (Volts) as a Function of Total Dose For V_{in}=25V.
(Measured with Parametric Analyzer)

Dose	Control	Dut#1	Dut#2	Dut#3	Dut#4	Dut#5	Average	St. Dev.
0	5.76	5.70	5.75	5.79	5.75	5.74	5.75	3.21E-02
5	5.76	5.71	5.75	5.80	5.76	5.75	5.75	3.21E-02
10	5.77	5.72	5.76	5.81	5.78	5.77	5.77	3.27E-02
15	NA	5.70	5.74	5.79	5.75	5.74	5.74	3.21E-02
18.5	NA	5.67	5.72	5.77	5.72	5.71	5.72	3.56E-02
21	5.74	5.69	5.74	5.78	5.74	5.73	5.74	3.21E-02
30	5.75	5.70	5.74	5.78	5.74	5.73	5.74	2.86E-02
40	5.77	5.73	5.78	5.82	5.78	5.78	5.78	3.19E-02
50	5.73	5.70	5.74	5.79	5.75	5.74	5.74	3.21E-02

Table III
I_{in}(amps) as a Function of Total Dose for V_{in}=25V.

Dose	Control	Dut#1	Dut#2	Dut#3	Dut#4	Dut#5	Average	St. Dev.
0	4.999E-02	5.002E-02	4.998E-02	5.003E-02	4.997E-02	5.001E-02	5.000E-02	2.52E-05
5	4.999E-02	4.999E-02	4.999E-02	4.997E-02	5.000E-02	4.997E-02	4.998E-02	1.44E-05
10	4.998E-02	5.002E-02	5.001E-02	5.001E-02	4.999E-02	5.002E-02	5.001E-02	1.32E-05
15	NA	4.998E-02	4.999E-02	4.999E-02	5.000E-02	4.998E-02	4.999E-02	9.29E-06
18.5	NA	4.999E-02	4.997E-02	5.001E-02	4.996E-02	4.997E-02	4.998E-02	2.01E-05
21	5.001E-02	4.998E-02	4.998E-02	5.003E-02	4.999E-02	4.998E-02	4.999E-02	2.06E-05
30	4.999E-02	4.999E-02	5.000E-02	4.997E-02	4.998E-02	5.002E-02	4.999E-02	1.85E-05
40	5.000E-02	5.001E-02	4.998E-02	5.000E-02	4.997E-02	5.000E-02	4.999E-02	1.56E-05
50	4.998E-02	4.999E-02	5.001E-02	4.998E-02	4.997E-02	5.002E-02	4.999E-02	2.12E-05

Table IV

V_{ref} as a Function of Total Dose for V_{in}=25V.

Dose	Control	Dut#1	Dut#2	Dut#3	Dut#4	Dut#5	Average	St. Dev.
0	2.4186	2.395	2.4138	2.4324	2.415	2.4108	2.4134	0.013314
5	2.4078	2.3854	2.4026	2.4218	2.4052	2.4004	2.40308	0.01299
10	2.4208	2.4022	2.4192	2.4408	2.4248	2.4248	2.42236	0.01386
15	NA	2.3832	2.4	2.4186	2.4024	2.3984	2.40052	0.012601
18.5	NA	2.3736	2.394	2.4142	2.3966	2.3928	2.39424	0.014423
21	2.406	2.3842	2.4048	2.4236	2.4068	2.403	2.40448	0.014005
30	2.4096	2.384	2.4012	2.4172	2.401	2.3964	2.39996	0.011908
40	2.4252	2.4108	2.4318	2.4498	2.434	2.433	2.43188	0.013886
50	2.3978	2.3848	2.4044	2.423	2.4066	2.4028	2.40432	0.013578

Table V

I_{ref} as a Function of Total Dose for V_{in}=25V.

(Calculated from the Equation in Fig. 1.)

Dose	Control	Dut#1	Dut#2	Dut#3	Dut#4	Dut#5	Average	St. Dev.
0	NA	NA	NA	NA	NA	NA	NA	NA
5	0.001905	0.001911	0.001906	0.001902	0.001906	0.001907	0.001906	3.21E-06
10	0.001902	0.001907	0.001902	0.001897	0.001901	0.001901	0.001902	3.41E-06
15	NA	0.001911	0.001907	0.001903	0.001907	0.001908	0.001907	3.1E-06
18.5	NA	0.001914	0.001909	0.001904	0.001908	0.001909	0.001908	3.55E-06
21	0.001906	0.001911	0.001906	0.001901	0.001905	0.001906	0.001906	3.48E-06
30	0.001905	0.001911	0.001907	0.001903	0.001907	0.001908	0.001907	2.94E-06
40	0.001901	0.001904	0.001899	0.001895	0.001899	0.001899	0.001899	3.42E-06
50	0.001908	0.001911	0.001906	0.001901	0.001905	0.001906	0.001906	3.34E-06

4. Conclusion

The TL431 showed negligible changes in V_{KA}, V_{ref}, I_{ref} and I_{in} up to a total dose of 50 krad(Si).