Test Report:
Total Ionizing Dose Testing of the AD584

Stephen Buchner, QSS Group Inc.
&
Jim Forney, MEI

21st December, 2006
NASA-GSFC

1. Introduction

This plan describes the total ionizing dose radiation testing of the AD584 from 7/15/2006 to 8/23/2006.

2. Device Description

The device is a programmable voltage reference manufactured by Analog Devices. Table I contains information about the part and the test conditions.

Table I.
AD584 Device and Test Information

Generic Part Number:	AD584
Full Part Number	5962-3812802VGA
Manufacturer:	Analog Devices
Lot Date Code (LDC):	0042A
Quantity Tested:	6
Serial Numbers of Control Sample:	1
Serial Numbers of Radiation Samples:	2, 3, 4, 5, 6
Part Function:	Voltage Reference
Part Technology:	Bipolar
Package Style:	TO-99 Can
Test Equipment:	Parametric Analyzer, dual power supply
Test Engineer:	J. Forney
Dose Levels (krad (Si))	3.5, 6 11, 16, 21, 30, and 40
Target dose rate (rad (Si)/sec)	0.02
Case Markings	0042A 5962-3812802VGA Q (0891), (0894), (0895), (0897), (0901), (0902)

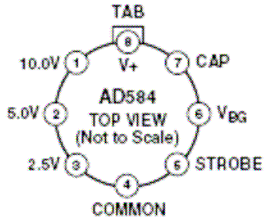

Fig. 1. Pin Connections for the AD584 in a TO-99 Can

For testing, the part was configured to provide a 7.5 V output by connecting pins 2 and 3 together. The input was 15 V.

3. Test Method

Five devices were mounted on a board such that 15 V was applied between pins 8 (V+) and pin 4 (common), the outputs were left floating and the other pins were grounded. Devices were exposed to gamma radiation in the NASA-GSFC Co^{60} source at a dose rate of 20 mrad(Si)/s because the device is bipolar and may exhibit ELDRS. After each dose increment, the devices were tested for functionality and parametric degradation using a parametric analyzer. The output voltage was scanned from 15 V to 30 V while the input current and the output voltage were monitored. Fig. 2 shows the connections used during testing. The output voltage is measured between pins 1 and 3. Parts were tested with and without a load consisting of a resistor (R=1.5KΩ)

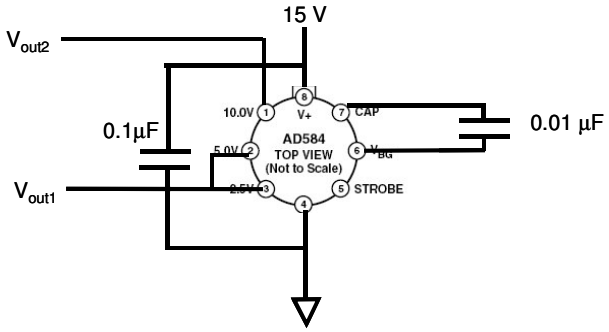

Fig. 2. AD584 Exposure Bias Circuit and Test Circuit. During parametric measurements monitor both Vout1 and Vout2.

Table II.
AD565 Parametric Characteristics.

Parameter	Condition	MIN	MAX	Units
Output Voltage Tolerance	Scan V_{in} from 10 V to 18 V		+/-30	mV
Quiescent Current	Scan V_{in} from 10 V to 18 V		1.0	mA

4. Results

Table III gives the output voltage measured for V_{in}=15 Volts as a function of total ionizing dose. All values are within +/- 30 mV of the nominal 7.500 Volt output with no load. Tables IV to VII give the maximum variation

Table III
Output Voltage For V_{in}=15 V with no Load

			Output Voltage for Vin=15V					
TID	**DUT1**	**DUT2**	**DUT3**	**DUT4**	**DUT5**	**Control**	**Average**	**St. Dev,**
0	7.504	7.506	7.506	7.498	7.500	7.502	7.503	0.004
3.5	7.504	7.504	7.504	7.496	7.502	7.504	7.502	0.003
6	7.504	7.502	7.502	7.498	7.504	7.504	7.502	0.002
11	7.508	7.502	7.502	7.498	7.502	7.502	7.502	0.004
16	7.508	7.506	7.504	7.500	7.502	7.506	7.504	0.003
21	7.506	7.506	7.502	7.510	7.510	7.504	7.507	0.003
30	7.506	7.506	7.508	7.502	7.504	7.503	7.505	0.002
40	7.508	7.508	7.504	7.510	7.512	7.505	7.508	0.003

Table IV
Maximum Change in Input Current when V_{in} was scanned
from 15 V to 30 V with no Load

Maximum Change in Input Current during Scan of Vin from 15 V to 30 V with No Load.								
TID	**DUT1**	**DUT2**	**DUT3**	**DUT4**	**DUT5**	**Control**	**Average**	**St. Dev,**
0	2.70E-06	1.90E-06	2.10E-06	2.30E-06	1.70E-06	1.70E-06	2.14E-06	3.85E-07
3.5	2.50E-06	1.70E-06	2.10E-06	2.20E-06	1.50E-06		2.00E-06	4.00E-07
6	2.60E-06	1.10E-06	2.10E-06	2.20E-06	1.30E-06	2.10E-06	1.86E-06	6.35E-07
11	1.40E-06	1.40E-06	2.00E-06	2.10E-06	1.30E-06		1.64E-06	3.78E-07
16	2.70E-06	1.40E-06	2.20E-06	2.10E-06	1.20E-06	1.80E-06	1.92E-06	6.14E-07
21	2.90E-06	1.30E-06	2.10E-06	2.30E-06	1.60E-06	2.00E-06	2.04E-06	6.23E-07
30	2.60E-06	1.40E-06	1.70E-06	2.20E-06	1.60E-06	1.90E-06	1.90E-06	4.90E-07
40	5.00E-06	2.40E-06	1.80E-06	2.00E-06	1.70E-06	1.90E-06	2.58E-06	1.38E-06

Table V
Maximum Change in Output Voltage when V_{in} was scanned
from 15 V to 30 V with no Load

Maximum Change in Output Voltage during Scan of Vin from 15 V to 30 V with No Load.								
TID	**DUT1**	**DUT2**	**DUT3**	**DUT4**	**DUT5**	**Control**	**Average**	**St. Dev,**
0	2.70E-06	1.90E-06	2.10E-06	2.30E-06	1.70E-06	1.70E-06	2.14E-06	3.85E-07
3.5	4.00E-03	6.00E-03	4.00E-03	4.00E-03	6.00E-03		4.80E-03	1.10E-03
6	4.00E-03	2.00E-03	6.00E-03	8.00E-03	4.00E-03	4.00E-03	4.80E-03	2.28E-03
11	4.00E-03	4.00E-03	4.00E-03	6.00E-03	6.00E-03		4.80E-03	1.10E-03
16	6.00E-03	4.00E-03	6.00E-03	4.00E-03	4.00E-03	4.00E-03	4.80E-03	1.10E-03
21	6.00E-03	4.00E-03	4.00E-03	4.00E-03	4.00E-03	4.00E-03	4.40E-03	8.94E-04
30	7.51E+00	7.51E+00	7.51E+00	7.51E+00	7.51E+00	7.50E+00	7.51E+00	1.67E-03
40	4.00E-03	4.00E-03	4.00E-03	6.00E-03	8.00E-03	4.00E-03	5.20E-03	1.79E-03

Table VI
Maximum Change in Input Current when V_{in} was scanned
from 15 V to 30 V with a 1.5 kΩ Load.

Maximum Change in Input Current during Scan of Vin from 15 V to 30 V with 1.5 kohm Load.								
TID	**DUT1**	**DUT2**	**DUT3**	**DUT4**	**DUT5**	**Control**	**Average**	**St. Dev,**
0	2.70E-06	1.90E-06	2.10E-06	2.30E-06	1.70E-06	1.70E-06	2.14E-06	3.85E-07
3.5	8.00E-06	5.00E-06	7.00E-06	6.00E-06	6.00E-06		6.40E-06	1.14E-06
6	6.00E-06	6.00E-06	5.00E-06	7.00E-06	6.00E-06	7.00E-06	6.00E-06	7.07E-07
11	6.00E-06	5.00E-06	7.00E-06	7.00E-06	5.00E-06	2.00E-06	6.00E-06	1.00E-06
16	9.00E-06	5.00E-06	6.00E-06	7.00E-06	7.00E-06	6.00E-06	6.80E-06	1.48E-06
21	7.00E-06	7.00E-06	6.00E-06	6.00E-06	4.00E-06	7.00E-06	6.00E-06	1.22E-06
30	8.00E-06	4.00E-06	7.00E-06	6.00E-06	6.00E-06	5.00E-06	6.20E-06	1.48E-06
40	7.00E-06	5.00E-06	6.00E-06	6.00E-06	4.00E-06	6.00E-06	5.60E-06	1.14E-06

Table VII
Maximum Change in Output Voltage when V_{in} was scanned
from 15 V to 30 V with a 1.5 kΩ Load.

Maximum Change in Output Voltage during Scan of Vin from 15 V to 30 V with 1.5 kohm Load.								
TID	**DUT1**	**DUT2**	**DUT3**	**DUT4**	**DUT5**	**Control**	**Average**	**St. Dev,**
0	2.70E-06	1.90E-06	2.10E-06	2.30E-06	1.70E-06	1.70E-06	2.14E-06	3.85E-07
3.5	6.00E-03	2.00E-03	4.00E-03	6.00E-03	6.00E-03		4.80E-03	1.79E-03
6	2.00E-03	6.00E-03	4.00E-03	4.00E-03	6.00E-03	6.00E-03	4.40E-03	1.67E-03
11	4.00E-03	8.00E-03	4.00E-03	6.00E-03	4.00E-03	4.00E-03	5.20E-03	1.79E-03
16	6.00E-03	6.00E-03	4.00E-03	6.00E-03	6.00E-03	4.00E-03	5.60E-03	8.94E-04
21	4.00E-03	2.00E-03	6.00E-03	4.00E-03	6.00E-03	6.00E-03	4.40E-03	1.67E-03
30	6.00E-03	4.00E-03	4.00E-03	8.00E-03	6.00E-03	4.00E-03	5.60E-03	1.67E-03
40	4.00E-03	4.00E-03	4.00E-03	6.00E-03	8.00E-03	8.00E-03	5.20E-03	1.79E-03

5. Conclusion

The AD584 meets all specifications after exposure to total ionizing dose of 40 krad(Si).