Total Ionizing Dose Test Results
AD565 High Speed 12-Bit Digital-to-Analog Converter

Jim Forney, MEI
&
Stephen Buchner, QSS Group Inc.

11/20/06
NASA/GSFC

1. Introduction

Testing was performed on the AD565, a 12-bit Digital-to-Analog converter manufactured by Analog Devices to determine the effects of exposure to total ionizing dose radiation.

2. Procedure

Eight parts were used for testing. Seven were exposed to gamma radiation emanating from a Co^{60} cell and one was kept as a control. The targeted dose rate was 20 mrad(Si)/s. During exposure the devices were biased in the following way. Power supply was set at +/-5V, all inputs were grounded and all outputs were left floating. Prior to the first exposure and following each exposure, all the parts were tested both for functionality and for their parametric values.

3. Device Information

Table I shows the information regarding the parts.

Table I
AD565 Information

Generic Part Number:	AD565ATDQMLV
Full Part Number	5962-9689202VJA
Manufacturer:	Analog Devices
Lot Date Code (LDC):	0013F
Quantity Tested:	8
Serial Numbers of Control Sample:	8
Serial Numbers of Radiation Samples:	1, 2, 3, 4, 5, 6, 7
Part Function:	DAC
Part Technology:	BiCMOS
Package Style:	24-PIN DIP
Test Equipment:	Parametric Analyzer, dual power supply
Test Engineer:	J. Forney
Dose Levels (krad (Si))	5,10,15,20,30, 40, 50, 75, 100
Target dose rate (rad (Si)/sec)	0.02
Case Markings	5962-9689202VJA Q 0013F

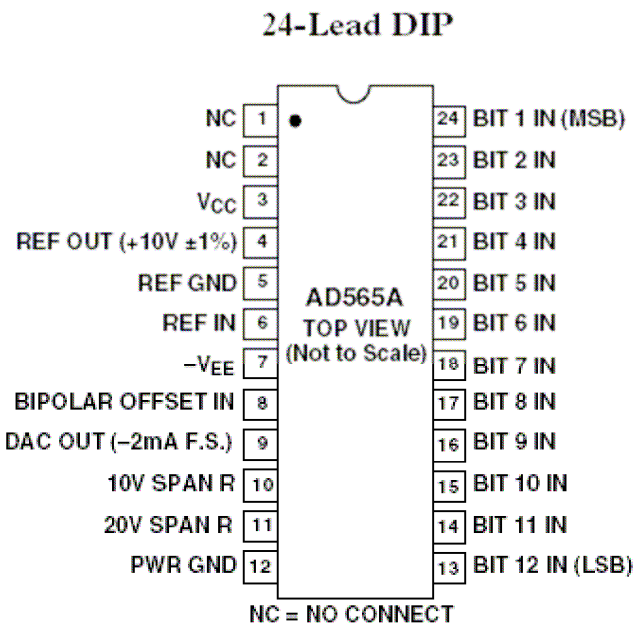

Fig. 1. Connections for the AD565 DAC.

4. Results

The following parametric values were measured:

- Positive Power Supply Current
- Negative Power Supply Current
- Reference Voltage
- Gain Error
- Bipolar Zero Error
- Differential Nonlinearity
- Output Current
- Settling Time
- Bit OFF Logic Input Current – all inputs at low voltage
- Bit On Logic Input Current – all inputs at high voltage

Table II
Power Supply I_{CC+} (mA)

Dose	DUT#1	DUT#2	DUT#3	DUT#4	DUT#5	DUT#6	DUT#7	Average	St. Dev.	Control	Spec
0	2.30	2.30	2.30	2.30	2.30	2.30	2.30	2.30	0.00	x	< 5.0
4	2.30	2.30	2.30	2.30	2.30	2.30	2.30	2.30	0.00	x	
11	2.30	2.30	2.30	2.30	2.30	2.30	2.30	2.30	0.00	x	
15	2.30	2.30	2.30	2.30	2.30	2.30	2.30	2.30	0.00	x	
20	2.30	2.30	2.30	2.30	2.30	2.30	2.30	2.30	0.00	x	
30	2.30	2.30	2.30	2.30	2.30	2.30	2.30	2.30	0.00	x	
40	2.30	2.30	2.30	2.30	2.30	2.30	2.30	2.34	0.00	x	
50	2.90	2.30	2.30	2.30	2.30	2.30	2.30	2.27	0.23	x	
75	2.30	2.30	1.80	2.30	2.30	1.80	2.30	2.16	0.24	x	

Table III
Power Supply I_{CC-} (mA)

Dose	DUT#1	DUT#2	DUT#3	DUT#4	DUT#5	DUT#6	DUT#7	Average	St. Dev.	Control	Spec
0	13.50	13.50	13.50	13.50	13.50	13.50	13.50	13.50	0.00	x	< 18
4	13.50	13.50	13.50	13.50	13.50	13.00	13.50	13.43	0.19	x	
11	13.50	13.50	13.50	13.50	13.50	13.00	13.50	13.43	0.19	x	
15	13.50	13.50	13.50	13.50	13.50	13.00	13.50	13.43	0.19	x	
20	13.00	13.50	13.00	13.50	13.00	13.00	13.00	13.14	0.24	x	
30	13.00	13.00	13.50	13.00	13.00	13.00	13.00	13.07	0.19	x	
40	13.00	13.00	13.00	13.00	13.00	13.00	13.00	13.00	0.00	x	
50	13.50	13.00	13.00	13.50	13.00	13.00	13.00	13.14	0.24	x	
75	13.50	13.00	13.00	13.00	13.00	13.00	13.00	13.07	0.19	x	

Table IV
Reference Voltage V_{ref} (V)

Dose	DUT#1	DUT#2	DUT#3	DUT#4	DUT#5	DUT#6	DUT#7	Average	St. Dev.	Control	Spec
0	10.00	10.00	10.00	10.00	10.00	10.00	10.00	10.00	0.00	10.00	< 10.1
4	10.00	10.01	10.00	10.00	10.00	10.00	10.01	10.00	0.00	10.00	
11	10.00	10.01	10.01	10.01	10.01	10.01	10.01	10.01	0.00	10.00	
15	10.00	10.01	10.01	10.01	10.01	10.01	10.01	10.01	0.00	x	
20	10.00	10.01	10.01	10.01	10.01	10.01	10.01	10.01	0.00	10.00	
30	10.00	10.02	10.01	10.01	10.01	10.01	10.01	10.01	0.00	10.00	
40	10.00	10.02	10.02	10.01	10.02	10.01	10.02	10.01	0.00	10.00	
50	10.01	10.02	10.02	10.02	10.02	10.02	10.02	10.02	0.01	10.00	

Table V
Gain Error (%)

Dose	DUT#1	DUT#2	DUT#3	DUT#4	DUT#5	DUT#6	DUT#7	Average	St. Dev.	Control	Spec
0	0.055	0.066	0.056	0.056	0.045	0.040	0.068	0.06	0.01	0.046	0.25
4	0.040	0.056	0.042	0.042	0.035	0.028	0.056	0.04	0.01	0.047	
11	0.018	0.040	0.030	0.028	0.027	0.020	0.048	0.03	0.01	0.045	
15	0.006	0.033	0.022	0.018	0.022	0.013	0.042	0.02	0.01	0.047	
20	0.007	0.026	0.013	0.009	0.016	0.006	0.036	0.02	0.01	0.047	
30	0.089	0.014	0.001	0.003	0.010	0.003	0.031	0.02	0.03	0.049	
40	0.029	0.007	0.009	0.011	0.007	0.009	0.025	0.01	0.01	0.047	
50	0.045	0.002	0.011	0.012	0.015	0.004	0.024	0.02	0.01	0.049	
75	0.054	0.037	0.045	0.041	0.007	0.032	0.005	0.03	0.02	0.047	

Table VI
Bipolar Zero Error (%)

Dose	DUT#1	DUT#2	DUT#3	DUT#4	DUT#5	DUT#6	DUT#7	Average	St. Dev.	Control	Spec
0	0.06	0.06	0.06	0.06	0.05	0.05	0.06	0.06	0.01	0.06	0.15
4	0.05	0.05	0.04	0.05	0.04	0.04	0.05	0.04	0.01	0.06	
11	0.04	0.04	0.03	0.03	0.03	0.03	0.04	0.03	0.00	0.05	
15	0.03	0.03	0.02	0.03	0.02	0.02	0.03	0.03	0.00	0.06	
20	0.01	0.02	0.01	0.02	0.02	0.02	0.02	0.02	0.01	0.06	
30	0.01	0.01	0.00	0.00	0.01	0.01	0.01	0.01	0.00	0.06	
40	0.01	0.00	0.01	0.01	0.00	0.00	0.01	0.01	0.00	0.06	
50	0.00	0.01	0.01	0.01	0.00	0.00	0.00	0.01	0.00	0.06	
75	0.00	0.04	0.04	0.04	0.02	0.02	0.02	0.02	0.01	0.06	

Table VII
Differential Nonlinearity (+/-3/4 LSB)

Dose	DUT#1	DUT#2	DUT#3	DUT#4	DUT#5	DUT#6	DUT#7	Average	St. Dev.	Control	Spec
0	0.005	0.006	0.005	0.005	0.005	0.005	0.005	0.005	0.000	0.006	< 0.007
4	0.005	0.007	0.005	0.005	0.005	0.005	0.005	0.006	0.001	0.005	
11	0.005	0.007	0.005	0.005	0.005	0.006	0.005	0.006	0.000	0.005	
15	0.005	0.006	0.005	0.005	0.005	0.005	0.005	0.005	0.000	0.005	
20	0.005	0.005	0.005	0.005	0.005	0.005	0.005	0.005	0.000	0.005	
30	0.012	0.005	0.005	0.005	0.005	0.005	0.005	0.006	0.002	0.005	
40	0.005	0.008	0.006	0.005	0.005	0.006	0.005	0.006	0.001	0.006	
50	0.006	0.009	0.007	0.005	0.006	0.006	0.005	0.006	0.001	0.005	
75	0.008	0.010	0.008	0.006	0.008	0.008	0.009	0.008	0.001	0.005	

Table VIII
I_{out} (µA)

Dose	DUT#1	DUT#2	DUT#3	DUT#4	DUT#5	DUT#6	DUT#7	Average	St. Dev.	Control	Spec
0	940.00	942.00	949.00	951.00	942.00	930.00	942.00	942.29	6.80	x	+/- 1200
4	939.00	948.00	949.00	951.00	942.00	933.00	942.00	943.43	6.35	x	
11	942.00	944.00	951.00	953.00	944.00	935.00	944.00	944.71	5.94	951	
15	942.00	944.00	951.00	956.00	949.00	937.00	947.00	946.57	6.24	x	
20	940.00	942.00	946.00	951.00	942.00	930.00	942.00	941.86	6.39	x	
30	940.00	942.00	949.00	951.00	944.00	933.00	942.00	943.00	5.94	946	
40	940.00	944.00	951.00	953.00	947.00	933.00	942.00	944.29	6.82	951	
50	942.00	942.00	949.00	953.00	944.00	933.00	942.00	943.57	6.29	895	
75	940.00	942.00	947.00	951.00	942.00	930.00	940.00	941.71	6.55	x	

Table IX
Settling Time ()

Dose	DUT#1	DUT#2	DUT#3	DUT#4	DUT#5	DUT#6	DUT#7	Average	St. Dev.	Control	Spec
0	2.15	2.22	2.23	2.22	2.15	2.20	2.17	2.19	0.03	x	
4	2.23	2.31	2.27	2.29	2.19	2.15	2.21	2.24	0.06	x	
11	2.22	2.22	2.35	2.23	2.23	2.22	2.28	2.25	0.05	2.17	
15	2.37	2.37	2.21	2.33	2.21	2.25	2.21	2.28	0.08	x	
20	2.35	2.35	2.35	2.17	2.19	2.21	2.29	2.27	0.08	x	
30	2.23	2.19	2.19	2.15	2.19	2.20	2.15	2.19	0.03	2.17	
40	2.23	2.19	2.23	2.23	2.19	2.23	2.23	2.22	0.02	2.27	
50	2.07	2.20	2.23	2.20	2.20	2.20	2.20	2.18	0.05	2.2	

Table X
Bit OFF (0) Input Logic Current (µA)

Dose	DUT#1	DUT#2	DUT#3	DUT#4	DUT#5	DUT#6	DUT#7	Average	St. Dev.	Control	Spec
0	30.10	30.33	31.00	30.57	31.52	30.05	31.53	30.73	0.63	x	< 100
4	30.41	30.98	31.19	30.91	31.40	29.97	30.64	30.79	0.49	x	
11	29.93	30.33	30.51	31.02	31.22	29.43	30.76	30.46	0.62	30.93	
15	30.24	29.94	30.51	30.43	30.64	29.51	31.06	30.33	0.50	x	
20	30.55	30.23	30.57	30.74	30.68	29.51	30.64	30.42	0.43	x	
30	30.27	29.98	31.01	30.83	31.10	29.52	31.05	30.54	0.62	31.3	
40	30.35	30.37	31.07	30.28	30.87	29.89	31.08	30.56	0.45	30.76	
50	30.30	30.41	31.06	30.34	30.51	29.44	30.51	30.37	0.48	27.5	
75	30.17	29.94	31.01	30.17	30.48	29.34	30.54	30.24	0.52	x	

Table XI
Bit On (1) Input Logic Current (µA)

Dose	DUT#1	DUT#2	DUT#3	DUT#4	DUT#5	DUT#6	DUT#7	Average	St. Dev.	Control	Spec
0	202.20	201.46	204.50	203.00	204.90	199.30	205.70	203.01	2.23	x	< 300
4	202.60	201.00	204.98	203.97	205.00	199.00	204.80	203.05	2.32	x	
11	202.10	201.40	204.10	203.90	204.60	198.70	204.70	202.79	2.20	203	
15	202.50	201.00	204.10	203.40	204.10	198.80	205.20	202.73	2.19	x	
20	202.67	201.40	204.20	203.70	204.27	198.80	204.60	202.81	2.09	x	
30	202.00	201.10	204.70	203.00	204.70	198.90	205.00	202.77	2.27	203	
40	202.60	201.50	204.80	203.40	204.50	199.30	205.10	203.03	2.09	203	
50	202.00	201.00	204.00	203.00	200.00	198.00	204.00	201.71	2.21	190	
75	202.00	201.00	204.00	203.00	204.00	198.00	204.00	202.29	2.21	x	

5. Summary

All parts passed testing for functionality. Parametric values were all within specifications up to 40 krad(Si). One part failed differential nonlinearity at 50 krad(Si) and 6 parts failed at 75 krad(Si).