On the Suitability of Fiber Optic Data Links in the Space Radiation Environment: A Historical and Scaling Technology Perspective

Kenneth A. LaBel[1], Cheryl J. Marshall[2], Paul W. Marshall[2,3], Philip J. Luers[1], Robert A. Reed[1], Melanie N. Ott[4], Christina M. Seidleck[5], and Dennis J. Andrucyk[1]

1. NASA/Goddard Space Flight Center, Greenbelt, MD
2. Naval Research Laboratory, Washington, D. C.
3. SFA, Inc., SFA, Inc., Landover, MD
4. Swales Aerospace, Greenbelt, MD
5. Hughes STX, Lanham, MD

Abstract—As NASA, DoD, industry, and others propagate the current spacecraft trends for increasing science data throughput and on-board processing, the use of fiber optic data links between spacecraft subsystems has gained heightened interest. With this in mind, we present a perspective of the use of these fiber optic systems in the space radiation environment that encompasses both the historical past and scaleable future space systems and their requirements.

1. Introduction

Fiber optic data links have several advantages over electrical alternatives for various spacecraft applications. This paper provides a detailed discussion of the advantages of "box-to-box" optical communications within a spacecraft; considerations of up- and down-links as well as intersatellite links are beyond the extent of this work. We will present an overview of the photonic components involved in implementing optical connections between spacecraft sub-systems. Also, a discussion the impact of radiation on these components and the implications that these impacts may have on system performance is presented.

A review of early spaceflight fiber optic systems and experiments will be given, followed by a discussion of the in-flight experience of current spaceflight hardware utilized by NASA's Goddard Space Flight Center. A major hurdle in qualifying an optical system for space applications is that it must pass radiation ground testing. We will discuss the issues involved with using commercial Gallium Arsenide (GaAs), emitter-coupled logic (ECL), or complimentary metal-oxide-semiconductor (CMOS) integrated circuits (IC) that interface the optical components to the electrical systems. In many cases, they are the limiting factor in the system's performance in the space radiation environment.

Finally, we will discuss how emerging technologies and systems enable on-board spacecraft performance including the fiber optic data bus (FODB) program, vertical cavity surface emitting lasers (VCSELs), metal-semiconductor-metal (MSM) detectors, and novel single event effect (SEE)-tolerant GaAs technologies. These technologies allow for the manipulation of large volumes of data.

2. Advantages of Optical System

The major advantages of using fiber optic systems for spacecraft subsystem communication over conventional electrical systems are ease of integration, fewer electromagnetic interference / electromagnetic compatibility (EMI/EMC) concerns, and reduced weight. Ease of integration reduces the time to integrate and test an interface, which leads to cost savings. Ease of integration is the primary advantage as an enabling technology for "better, faster, cheaper" spacecraft. Fewer EMI/EMC concerns reduces design as well as test time. Weight performance is another advantage, however the majority of the weight loss may be realized by using any standard bus in lieu of a full custom, point-to-point or parallel design.

Ease of Integration

The majority of the cost of defining, designing and integrating a spacecraft is spent during integration. This is partly because of the manpower involved in integrating a spacecraft, but more importantly the fact that people are standing and waiting while problems are being debugged. It follows that the fewer problems to debug results in a more efficient integration effort, which in turn results in a lower cost and shorter schedule. It has been our experience that fiber optic busses make integration of a spacecraft less troublesome and more efficient.

Electrical integration of a subsystem to a spacecraft mainly consists of safely completing all electrical connections and testing each interface. Safely completing an electrical connection typically requires a "safe-to-mate" procedure that is performed to help ensure that the connection will not damage the electrical components within any of the flight hardware. This procedure typically begins with powered-off resistance measurements of the harness, verifying that the component at the other end is connected correctly, that there are no open circuits in the harness, and that there are

0-7803-4311-5/98/$10.00 © 1998 IEEE

no short circuits in the harness. The next step would be "open circuit" powered-on measurements to verify that all voltages are within limits prior to connection. Finally, "closed circuit" powered-on measurements are made once the electrical connection is completed. These final measurements would verify waveform character such as voltages, rise times, fall times, overshoot, and undershoot. Completing all of these measurements for every electrical connection from one subsystem to another is a long and tedious process that is absolutely essential for safe electrical connections of flight hardware.

Optical integration of a subsystem to a spacecraft is, by contrast, a much simpler and cheaper process. The transmitter output power and receiver sensitivity for each subsystem is measured prior to spacecraft integration. Also, the fiber cable is terminated, polished and tested. Performing these preparations before spacecraft integration allows for safe integration of fiber optically linked subsystems by simply cleaning the end and screwing in the fiber.

A lower risk of damage by the use of fiber optic connections is especially advantageous with respect to test equipment and other non-flight hardware. Electrically connecting anything to flight hardware is a concern because of the expense of the hardware and the risk to the overall schedule if anything is damaged. Using a fiber optic bus has the advantage that non-flight components can be connected to flight components for testing without risk to the flight electronics.

Integration of a spacecraft subsystem is also simplified by the elimination of "ground loops" in the harness between spacecraft subsystems. Different subsystems on different parts of the spacecraft have slightly different grounds, resulting in a potential difference between boxes. Design or fabrication errors may cause electrical connections between boxes forming current paths in the harness or the shield. This in turn may cause a subsystem that worked prior to spacecraft integration, to have improper measurements or cease to function properly. Using fiber optics for communication eliminates the conductive paths between subsystems, avoids the installation of "ground loops" and simplifies integration.

Fiber optic busses allow the use of more commercial-off-the-shelf (COTS) cables and less custom-built electrical harnesses. This allows one more item to be purchased instead of fabricated, saving money and time. Lost or damaged cables may be replaced easily. Packing and moving of hardware and test equipment is easer, since all of the fiber optic cables are interchangeable.

Fiber optics offers the test personnel the advantage of monitoring the bus traffic without changing the characteristics of the bus. Equivalent monitoring of an electrical bus changes the loading and may introduce interference and noise into the bus traffic. On a fiber optic bus, the monitor may be located almost anywhere because length of cable is essentially not a consideration.

Fewer EMI/EMC concerns

Another advantage of optical links is that there are fewer EMI/EMC concerns over the conventional electrical bus. Electrical systems utilize shielded wires with one or both ends of the shield grounded, this reduces electromagnetic emissions by electrical harness. Shielded wires, careful routing, and bundling practices all reduce cross talk between wires in a harness. Fiber optic cable, by their nature, does not emit electromagnetic energy. It is not susceptible to interference from other cables, wire or fiber. Optical fiber does not exhibit the capacitance effects of wire, therefore electrical considerations such as rise times, fall times and ringing are not an issue.

Reduced Weight

The most noticeable physical advantage of fiber optics is the lower weight of the cable. Dramatic weight savings can be had if the fiber optic cable is part of a standard bus structure that eliminates many point-to-point custom interface designs. In some extreme cases, a 10-kg harness of 133 shielded twisted pairs may be replaced with a 0.1-kg fiber optic ring bus. Where the weight savings primarily comes from is implementing a bus, structure, then secondarily from implementing it with fiber optics.

Scalability

Implementing a system using fiber optics allows the system to be scalable to higher rates without major architecture changes. The same fiber architecture that is used to implement a 1 Mbps/s bus is able to be evolved to implement a 20 Mbps/s bus without adding parallel fibers, additional signals or changing underlying communications structure.

3. Optical Link Components and Systems

A fiber optic data bus configuration usually contains a means by which a signal is optically transferred from one point to another via an optical transmitter through a passive link such as an optical fiber to a receiver. The receiver converts the signal from an optical signal to an electrical signal. A transimpedance amplifier converts the signal into a voltage for processing by other electronics.

Either small lenses or optical interconnections are used to couple the transmitter and receiver to the optical fiber. Optical couplers are used as power branching devices that split optical power by any ratio to other locations or paths. Cable assemblies that contain optical fiber protected by layers of fluoropolymers and terminated on either end with optical connectors are used to couple light from one point to another. Other devices such as attenuators are used to reduce the input power to the receiver. Isolators are used for providing a guard against reflections from the optical

system traveling back into the optical source. Typical sources used in spaceflight communication hardware are insensitive to reflections.

Optical Fiber

In, for example, the MIL-STD-1773 optical fiber communications bus, the fiber used for the system is considered multimode and large, 140 micron outer diameter and 100 micron diameter for the optical fiber core. Single mode applications use fiber that has a core size of approximately 9 micrometers and a glass cladding outer diameter of 125 micrometers. In either case, the index of refraction of the core is slightly larger than the surrounding glass cladding. Light will be guided down the core by total internal reflection.

Light in a single mode fiber essentially follows a single path to reach its destination, in multimode fiber applications light takes many paths, which leads to a spreading of the pulse called dispersion. The multiple paths limit the bandwidth of a signal traveling through a multimode link. The bandwidth can be increased by creating a fiber that has an index of refraction is not constant over the cross section, but varies with a maximum at the center and dropping off until it nearly reaches the index of refraction of the cladding. The graded index core decreases dispersion, which increases bandwidth.

In order to achieve a graded index fiber the core of the optical fiber must be doped with other materials such as germanium. (Although adding dopants to silica glass will increase its sensitivity to radiation, all graded index multimode fiber is doped with other materials.) Dopants used in optical fiber may be controlled in a way to allow certain wavelengths of light to pass with little loss while attenuating other wavelengths. Whereas in the past multimode communications systems typically operated at 850 nm, they now operate at the 1300 nm wavelength. In most cases, less loss is experienced at the longer wavelength. It is also true that in most cases operating at a longer wavelength with allow the fiber to perform better in a radiation environment [1].

Optical fiber always arrives from the manufacturer with a coating on top of the cladding layer of glass. At present the choices are polyimide coating or acrylate coating. Underneath these coatings are usually amorphous carbon layers creating a hermetic sealant. Both types of coatings have been used in spaceflight systems. For long duration missions it is recommended that a hermetic coating be used, and that if acrylate coating is used on optical fiber it be used as part of an overall cable configuration due to outgassing concerns.

For optical cable many issues of concern are associated with the materials used and the process by which the components are fabricated into a cable configuration. Some materials experience large amounts of thermal effects due to the large thermal expansion coefficients of the materials. The amount of shrinkage the overall cable components (not including the coated optical fiber) experience over thermal cycling has become of more concern due to Space Station studies. The effect of shrinkage here is permanent and results in microbend losses in the optical fiber. It is important for reliability concerns that the amount of both types of shrinkage be limited for spaceflight applications.

Materials used for strength members (teflon impregnated fiber glass) were traditionally used only in spaceflight applications. However, now due to the understanding of the hygroscopic qualities of Kevlar it is considered more acceptable for spaceflight applications in a cable configuration. This is a commercially available product unlike that of the traditional strength members. Another important aspect of any cable assembly is that all components used in a cable configuration terminate a cable to an interconnection device be compatible by dimension [2].

Transmitter

Multimode fiber systems optical transmitters need only be a light emitting diode (LED); whereas for single mode applications a laser diode is necessary to achieve the wider bandwidth. LEDs are used as source emitters in multimode transmission systems that typically are no larger than 50 Mbps/s since they have large spectral width in comparison to laser diodes. Laser diodes and LEDs function by releasing photons via the recombination of electron-hole pairs within a p-n junction. The e-h pairs are separated in energy by an amount equal to the bandgap of the semiconductor at the p-n junction. The recombination event produces a photon with energy equal to bandgap energy. A current is applied to the device that drives this spontaneous emission. In laser diodes, the photons will then create other photons by stimulated emission and the result is a beam of coherent light, where in LEDs the light generated is incoherent.

In comparison to laser diodes, LED's can generally be driven harder, are less expensive, have lower power, larger emitting regions, and longer lifetimes. Lasers, unlike LED's will not operate below a threshold current. Meaning, the diode will commense lasing (functioning) only when the threshold current is reached. LEDs and laser diodes are temperature sensitive when considering overall lifetime, for example, operating a laser diode at 10 °C higher than rated will half the life of the diode. Also, a laser usually will stop functioning at 100°C. The degradation modes that result in failures or gradual degradation of these devices can be modeled using Arrhenius relationships where each degradation mode carries a specific activation energy Ea. For example in reliability tests in which lifetime is based on temperature aging, the relationship is life = $A\ e^{Ea/kT}$, where T is the absolute temperature in Kelvin [3].

The radiation sensitivity of these sources depends greatly on the materials used for the device. When the same material is used in a device to dope the p and n sides the device tends to be more sensitive to radiation effects. It is also true that dopants used to shorten the radiative recombination lifetime

of minority carriers or increase the density of minority carriers in the device will be more radiation hardened. In many cases using larger drive currents to increase the minority carrier density of the device will decrease the devices sensitivity to radiation damage [4].

Receiver

The receiver of an optical communications system is comprised of a photodiode, which converts optical energy into electrical energy and does this for certain wavelengths of light depending on the materials used in device fabrication. For detection of signals, many communication systems operating under 5 Gbps/s use PIN (positive-intrinsic-negative) diodes. These devices function by generating an output current for a given input optical signal.

PIN diodes have an intrinsic region between the p-type and the n-type sides of the device to increase the absorption of photons, and therefore increase the efficiency of the device. There is a trade off between the speed and the efficiency of the device. As the intrinsic layer increases in size, the device efficiency increases, but, due to the increased distance the carriers must travel, the overall response slows down. This increased volume can also make the device much more sensitive to radiation effects due to the larger volume increasing the probability of an unwanted charged particle being able to traverse the region. As optical detectors, PIN diodes tend to last longer in a radiation environment than phototransistors, which have internal amplification of the optical signal [5].

Silicon is used for the detection of wavelengths under 1000 nm. InGaAs is used for infrared detection or for longer wavelength communications typically around 1500 nm or 1300 nm. Without a bias applied to the detector, an output voltage is produced for a given input optical signal. Increasing the bandwidth response of these devices can be accomplished by applying a voltage. When applying a voltage, or operating in a "photoconductive" mode, dark currents are created that creating a noise component in the output which inhibits the detection of the photon signal. Thermally generated dark currents that lead to noise in a device may increase by 10% per increase of 1 degree C. Dark currents are also effected by radiation damage and can limit the detector's ability to monitor low levels of input optical signal. Materials used in manufacturing the device have an effect on the dark current. Photodiodes used for longer wavelength applications, such as in current communication systems, will have to be operated such that the dark currents are limited as much as possible. Overall radiation damage of the detector and the source of a communications system will be discussed later.

Power Branching Devices

In typical communications systems optical couplers are used to split power from one path into many paths so as to bring signals to other locations on the communications bus. These optical couplers are made of coated optical fiber and are usually terminated on the ends with optical connectors that are compatible with the rest of the interconnection system. Star couplers contain a number of equal ports on each side so that any input on one side can become an output on the other and vice versa. These devices are bi-directional and signals traveling in the opposite direction do not interfere with signals traveling to another destination.

In addition to the reliability issues for optical fiber, couplers also have a long-term reliability issue that is dependent on the process used to fuse the optical fibers at a single point. The single point where all the fibers merge together is where the coupling occurs. It is important to chemically remove the coating from the fiber during fabrication of the coupler, mechanical stripping is considered a reliability hazard for optical fiber in spaceflight. Mechanical stripping can cause small scratches that will increase in size and become cracks during thermal fluctuations and vibrations. This is also the case when terminating optical fiber. It is also important that large impurities do not enter the fused section during fabrication. A coupler's susceptibility to radiation effects is primarily the same as for that of an optical fiber where external coatings as well materials present can have effects on the amount of attenuation induced in the fiber.

When discussing couplers, secondary cabling components that are vital to point to point spacecraft links are optional if they are placed in a box enclosure, however, without jacketed protection, any coating materials used must be either non-outgassing or by isolating all susceptible parts. The fiber used in couplers may not be hermetic like that of commercially available optical fiber due to the fabrication process. That being the case, the coupler will tend to last a shorter amount of time in a harsh environment as compared to the optical fiber used for other parts of the data bus.

Interconnection

In the past FSMA and SMA (threaded) connectors were used as well as multipin military connectors that have optical termini inside of a MIL-C-38999 connector shell (used in electrical applications). However, due to the lack of repeatable performance during mating and demating of these types of connectors, future spaceflight hardware at GSFC will be using a FC connector. The combination of being threaded and keyed make these connectors more reliable for repeatable results. In fact, the FC connectors currently used for point to point spacecraft cable assemblies are pull proof, meaning that the ferrule assembly is isolated from the connector body. A non pull-proof version will be used to mount on boxes.

It is important for the long-term reliability of the transmitter (for LEDs and especially for laser diodes) that the polish used on these connectors limit all back reflections. For this purpose, and for the additional purpose of allowing a higher power transmission through the interconnection system, a physical contact or PC polish is used for all connectors in the system. Although there are many issues associated with reliability of the connectors used in a spaceflight

communications system there are termination methods that can be used such that some of these issues are not a concern. Radiation is a not an issue for these components.

Protocol layers above the physical media

Based on the standard seven layer protocol model (physical, link, network, transport, session, presentation, and application), the optical components provide the traditional physical media. For the transferring of data and commands in a spaceflight system, it is up to the electrical hardware (integrated circuits or ICs) or system software to provide the upper layers such as link and/or network protocol. As fiber optic applications approach higher speeds (i.e., 1 Gbps/s rates), these associated electronics must also be capable of operating at these rates. This drives the choice of electronic device technologies to meet these requirements. As we shall see in the sections that follow, the radiation tolerance of these electronics are often the limiting factor for space radiation environment applications.

4. The Radiation Hazard for Fiber-Based Systems

The space radiation environment is highly dependent on orbital altitude and inclination, as well as time. It is dynamic with periodic trends modulated by the 11 year solar cycle. It is comprised of energetic magnetically-trapped electrons in the outer Van Allen radiation belt, trapped protons in the inner belt, solar event protons and ions, and heavily ionizing heavy ions known as intergalactic cosmic rays. In addition to the environment, the exposure of a given component depends on its location within the satellite. Energetic electrons give rise to total ionizing dose. In thinly shielded positions (< 50 mils Al), dose rates of several mega-rads per year (Mrad/y) are possible in the heart of the belts, but electrons are effectively stopped by structural and shielding materials at depths > 100 mils Al. Protons deposit ionizing dose at rates approaching 100 kilo-rads per year (Krad/y) for thinly shielded positions near the heart of the proton belts. Shielding may effectively stop lower energy protons, but higher energies, either from solar particle ejection events or from trapped particles, will penetrate even massive shields. It is generally assumed that proton and electron dose are additive, and either may dominate depending on the orbital position and shielding. Protons also give rise to atomic displacements following from collisions in semiconductor materials. Displacement damage is quantified in terms of the nonionizing energy loss rate, and it has been shown to cause failure in several types of optoelectronic components.

In addition to total ionizing and nonionizing doses, which are both cumulative, satellite designers must be concerned with transient ionization events from single particles. Protons and cosmic rays both give rise to such effects. There are several classifications of single particle events which range from short term transients to permanent device failure. The interested reader can find in-depth treatments of all of these effects and the environments in the December issues of the IEEE Transactions on Nuclear Sciences and in the short course notes from the annual IEEE Nuclear and Space Radiation Effects Conference.

There are several possible adverse effects of space radiation on components of fiber-based data links and busses. Here we will provide a brief discussion of those which may be important, if not mitigated either through component selection or subsystem design. These topics include darkening of optical components from total ionizing dose (TID), displacement damage in optoelectronics, TID effects and SEEs in supporting microelectronics, and finally proton-induced single event effects in optoelectronic receivers which contribute to the link bit error rate (BER). Particular attention will be given to this latter mechanism due to the combination of its likelihood of occurrence and the unique nature of this effect on satellite fiber optic links.

Darkening in Passive Optical Components

Radiation-induced attenuation of optical signal in fibers and lenses has been studied extensively, and there are numerous references covering those results. Attention has also been given to specific concerns arising from the TID levels and dose rates typical of satellite applications [5, 6-8 and references therein]. These investigations support the position that given the short fiber lengths of less than 50 meters on satellites, there should be no problems caused by fiber darkening. This follows in part from the fact that the damage readily anneals in the low dose rate environment. Certainly some fibers will be more resistant to darkening than others (e.g. pure silica versus phosphorous doped), and those are the best candidates for the space environment [5]. Typically, attenuation in the order of < 1 dB might be expected over the course of ~ 100-200 krad(Si) delivered over a 7-10 year mission [5].

Similarly, lenses (especially graded index (GRIN) lenses) have been shown to be sensitive to darkening. These lenses are frequently an integral part of optical subassemblies where they serve to couple light between the optoelectronic device and the fiber. Again, there are satisfactory component choices due to the combination of low dose rate exposure, annealing of damage with time, and availability of relatively resistant components [5, 9]. Where possible it is recommended that graded index lenses be avoided in the system design, since the expected attenuation from a single lens can also approach 1 dB.

With appropriate selections of radiation tolerant components and good design practices, the aggregate radiation-induced attenuation from fibers, couplers, and lenses might account for attenuation on the order of 1-2 dB over the course of a multiyear mission receiving 200 krad(Si) [5]. Such losses can be readily accommodated in optical power budgets, and with proper component selection they can easily be minimized.

Displacement Damage

It is widely recognized that particle-induced displacement damage is able to affect the light output of optoelectronic sources as well as causing dark current increases and responsivity degradation in optoelectronic detectors. For the case of Si and GaAs-based components, these effects have been reviewed in [10-12]. As was mentioned in the introduction, most current development activities are using 1300 nm optoelectronic devices fabricated in InGaAsP and InGaAs. The effects on proton induced displacement damage on these technologies have also been assessed [13]. The findings of these studies show that for proton fluences expected during a multiyear mission, the effects on sources would be negligible, and dark current increases would only be a problem in photodiode circuits with extreme noise sensitivity. For the case of responsivity degradation, a margin of ~0.5 dB might be appropriate for missions exposed to high fluences (> 10^{12} cm^{-2}), but as is the case with fiber darkening, such a margin would be easily accommodated in a realistic optical power budget. In short, displacement damage degradation should be considered where high proton fluences are expected, but those effects should be easily accommodated with minimal system impact.

Support Electronics

It is beyond the scope of this paper to explore the details of radiation effects in microelectronic devices, however these devices are essential in any integrated fiber-optic link architecture. In typical subsystem configurations, fiber interface units are comprised of the bus transceivers as well as Si ASIC chips for protocol control, Si dual-port RAMs for data buffering and host interface, and high speed GaAs for data formatting and serial data transfer into the optoelectronic transmitter circuit and out of the receiver circuit. Radiation tolerant fiber optic hardware designs must necessarily utilize appropriately hardened technologies for TID purposes, latchup immunity, and SEU tolerance. A discussion of issues pertaining to SEE in high speed GaAs circuits for fiber links can be found in [14], and SEE error tolerance at the fiber bus subsystem level can be found in [15, 16]. Thus, microelectronic radiation effects and hardening issues are an integral part of any fiber-optic technology implementations on satellites.

Single Proton Effects in Receivers

This section addresses a special case of single event effect unique to fiber-optic links: the introduction of a bit error from the ionizing energy imparted directly by a single proton. We first examine the manner in which digital data is transmitted via a fiber optic connection and then describe how particle-induced signals can disrupt data. It has been previously reported, that a fiber optic link's most sensitive component to single particle effects is the receiver photodiode [17-21]. This is perhaps not so surprising in view of the fact that this optoelectronic detector functions to capture digital information at rates into the Gbps/s regime from optical signals with average powers of a few microwatts. Also, the photodiode must necessarily be large enough to capture the optical signal. For typical multimode fiber, this corresponds to surface areas of thousands of square micrometers (the device examined in our study has a 75 micrometer optical aperture with an 80 micrometer diameter junction). Photodiode physical cross-sections can easily exceed 10^{-5} cm^2, and due to their extreme sensitivity, the error cross-sections can be correspondingly large.

Figure 1 depicts the disk-shaped planar photodiode structure under reverse bias conditions and indicates various particle trajectories which deposit charge by direct ionization. The sketch beneath shows resulting current pulses sensed in the receiver circuit which decay with a RC time constant determined by the circuit bandwidth. Also depicted is the received signal provided in a no-return-to-zero (NRZ) protocol containing the digital information. The ratio between the high and low current levels (the "extinction ratio") is typically about 10. Receiver circuits are almost always designed to accommodate a range of incident average optical powers and automatically adjust the decision level, or threshold, to be midway between the high and low levels. As suggested in the figure, data can be disrupted if ion-induced current exceeding the threshold current is sensed at the critical mid-bit decision when a "0" is being transmitted.

The two distributions shown at the lower right of the figure indicate the contributions of multiple noise sources leading to a distribution of signals received to represent "1s" and "0s". Except for very low incident optical signals, the shape is approximately gaussian, though the widths have been exaggerated in the sketch. According to communications decision theory, we would expect a usually small, but finite, probability of false bits from the intersymbol interference where the distribution tails extend beyond the decision level. Thus *any* ion-induced photocurrent flowing when a "0" has been transmitted increases the probability of false detection, and thus must be treated as part of any bit error rate calculation [21, 22].

Mitigation of Single Proton Effects in Receivers

Though the photodiode must be large enough to capture the optical signal, it obviously should be no larger. Our analysis indicates better SEE characteristics for III-V direct bandgap detectors since the depletion depth need only be about 2-3 micrometers for > 80% quantum efficiency. This is in contrast with indirect bandgap detectors, such as Si for 830 nm applications, in which depletion depths are about twenty times larger. Specifically, the thinner InGaAs structure minimizes both the "target" size for ion strikes as well as the ion pathlength when hit. Also, the III-V device is characteristic of the design choices being considered for high bandwidth data busses since the thin junction offers minimal capacitance. To take advantage of these benefits, most of the design efforts cited elsewhere in this paper will use III-V InGaAs detectors for 1300 nm lightwave detection. Even though planned satellite systems will use 1300 nm III-V technologies, this is not necessarily the

wavelength of choice for avionics components which often use 830 nm technology, primarily due to better thermal stability in light sources at temperatures over 80 degrees Celsius.

Along with photodetector material and geometry, there are several additional tradeoffs which a buss designer may consider. These may involve component selection, circuit hardening, or system mitigation. For example, selection of single mode components allow even smaller detector geometries, but at the price of tighter tolerances on interconnects and this may not be a trivial tradeoff considering the shock and vibration and other requirements for satellite applications. Metal-semiconductor-metal (MSM) detectors also provide alternate an detection approach with attractive geometries for minimizing single event rates.

The next level of trade assumes that transients will occur in the receiver, but they can be rejected with novel circuit design approaches. As an example, receivers for the AS-1773 bus for operation at 1 and 20 Mbps have been designed with SEE hardened circuits. References 33 and 34 describe two different transient rejection circuits. The general approach requires excess bandwidth on the front end of the receiver which establishes a fast response to particle transients. The optical signal representing a bit is longer than the particle transient, and this allows oversampling and filtering to assure valid data. Such approaches are practically limited to busses operating below ~100-200 Mbps/s, since the duration of the optical bit and particle transients converge at higher data rates.

Finally, the task of error handling and error correction can be treated at the subsystem level. Again, an example can be taken from the AS-1773 that treats errors the same as its predecessor, the MIL-STD-1553 copper wire bus. These busses use Manchester encoded data which assures a "1" to "0" or "0" to "1" transition for valid data. A particle strike precludes such a transition. As described in the referenced standards, the bus transceiver flags failed Manchester codes, and a request is sent to the transmitting node to retransmit the last block of data. Thus error free transmission comes at the price of a 50% overhead in bus bandwidth (to support Manchester encoding), the need for a "handshaking" architecture, and the need for buffer memory on the transmitting nodes. Again, these three "penalties" become exceedingly difficult when considering higher bus speeds.

Other subsystem solutions involve standard EDAC and block encoding schemes [23], and each solution carries its associated limitations in abilities to handle high error rates and penalties in subsystem power and complexity. However, all these tools can be traded off and applied by the design engineer to optimize the solution for the specific needs of a given application.

5. Early Flight Experiments and Systems

One of the earliest fiber optical experiments to be flown in space was the Long Duration Exposure Facility (LDEF) [24]. Because of the relatively benign orbit, the total dose experienced by the fibers over the 69 month period was about 200 - 25,000 rads(Si) depending on the shielding. Results were obtained by Phillips Laboratory [25] for four optical fiber data links comprised of step index fibers and operating at 830 nm. These links were state-of-the-art for the 1978-1980 time frame. With the exception of one cable that was severed by a micrometeorite impact, no permanent degradation was noted. However, on-orbit cyclical variations of ~20 dB in the signal-to-noise ratio, which generally correlate with temperature variations, were measured in two of the fibers, perhaps due to connector instability or cabling effects. Nevertheless, these experiments demonstrated the potential viability of optical fiber data links in space.

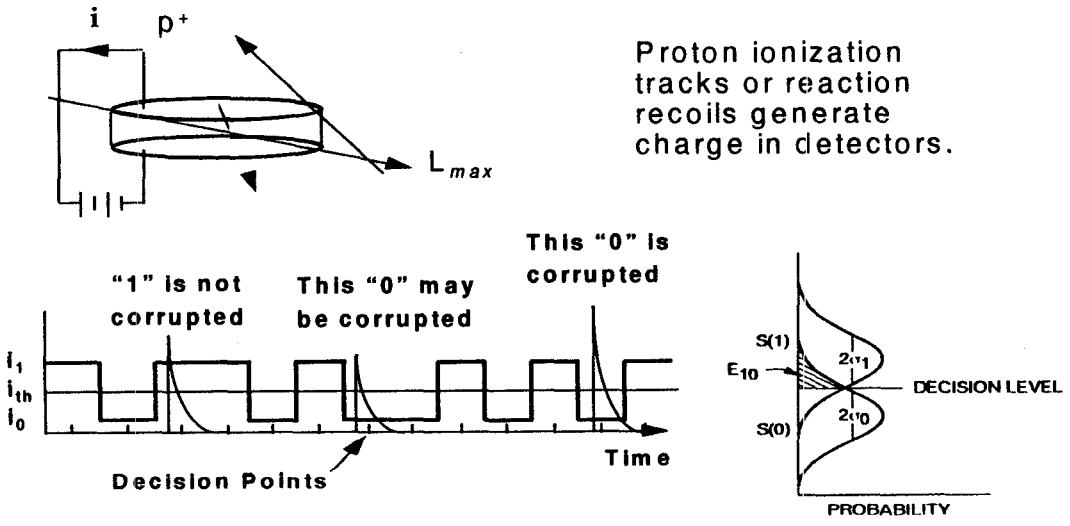

Figure 1. Proton Induced Bit Errors.

In 1993 Boeing built and delivered a package of five experiments designed to evaluate the long term (5 years) performance of selected fiber optics and photonics components in a space environment [26, 27]. The Optical Fiber Radiation experiment was included to monitor the radiation induced darkening of 4 multimode optical fibers including step and graded index fibers at 850nm and 1300 nm. The passive components experiment directly tests 2 coupler types and indirectly provided radiation information on two Canstar optical couplers. A Boeing strained quantum well laser and custom broadband LED were evaluated in two separate experiments. The Bit Error Rate experiment measured particle induced single event errors in a simulated MIL-STD-1773 optical data link that was not hardened. We expect to see substantial improvement in the second generation hardened Boeing DR1773A space experiment which will fly on the Microelectronics and Photonics TestBed (MPTB) due to launch late 1997. Although some of the PSE experiments yielded results not yet understood, it has demonstrated the general robustness of optical fiber systems in the space environment.

The COBE satellite was developed by NASA's Goddard Space Flight Center to measure the diffuse infrared and microwave radiation from the early universe, to the limits set by our astrophysical environment [28]. It was launched November 18, 1989 and carried three instruments: 1) a Far Infrared Absolute Spectrophotometer (FIRAS) to compare the spectrum of the cosmic microwave background radiation with a precise blackbody, 2) a Differential Microwave Radiometer (DMR) to map the cosmic radiation precisely and 3) a Diffuse Infrared Background Experiment (DIRBE) to search for the cosmic infrared background radiation.

The COBE spacecraft provided some relatively early data on radiation effects (in particular SEEs) on photodiodes similar to those used in fiber optic data systems [29]. On this spacecraft, photodiodes and optical fibers were utilized in the circuitry that determined the positioning and motion sensing of a mirror instrument system. During several spacecraft passages through the SAA, erroneous voltage pulses were observed in this system. Ultimately, these pulses led to incorrect mirror position determination.

The photodiodes used were standard Si PIN type tuned to a 850 nm wavelength. Limited ground irradiation tests were performed which simulated these erroneous voltage pulses thus showing that proton-induced transients were the likely cause of the in-flight anomaly. It should be noted that Compton Scattering is the physical mechanism proposed for this effect in [29]. Later test results on MIL-STD-1773 systems showed direct ionization to be the prime physical mechanism in these type of photodiodes.

Fortunately for COBE, mirror positioning was not critical during the SAA portion of the orbit. Thus, this anomaly had little impact on the ultimate success of the COBE mission.

6. Current Fiber Data Links

The MIL-STD-1773 data bus, also known in these spaceflight applications as the 1773 or SEDS 1773 bus, is a master/slave, star-configured, 1Mhz bandwidth means of passing telemetry and commands between spacecraft subsystems [30]. The 1773 bus is inherently reliable due to its use of a redundant bus structure. The 1773 bus transfers messages up to 32 words between subsystems encoded with Manchester coding. Data transfer includes parity and other error checking means to control the error flow. Additionally, if an error occurs, the 1773 bus has the option of automatically retrying the same data transfer that failed on either bus side thus reducing the effective error rate. Each subsystem contains a 1773 optical terminal that is comprised of integrated receivers, integrated transmitters, and a digital IC. Figure 2 illustrates the representative use of the 1773 terminals or transceivers in a user's system.

Table 1. Summarizes Representative Spaceflight Missions and Experiments Along With Their Associated Fiber Data Links.

PROJECT	LAUNCH	TECHNOLOGY	SYSTEM WAVE LENGTH
SAMPEX	7/92	MIL-STD-1773 1Mbps	850nm
MPTB	12/97	AS1773 20Mbps	1300nm
MAP	2000	AS1773 20Mbps	1300nm
XTE	12/96	MIL-STD-1773 1Mbps	850nm
HST	02/97	MIL-STD-1773 1Mbps	850nm
PSE	Proprietary	MIL-STD-1773 1Mbps	

The Solar Anomalous Magnetospheric Particle Explorer (SAMPEX) mission was NASA's first use of a fiber optic data bus in a spacecraft. Launched in July, 1992, it has performed flawlessly to date providing over 5 years of SEU data for analysis. Figure 3 presents a trending plot of the average bus retries versus time for the first four years of the SAMPEX mission. Averages are between 9-14 retries per day and are within a factor of 2 of the worst-case analysis utilized for mission predictions. One might note the increase over time in retry rates; this correlates well with the expected increase in proton fluences as the mission has transitioned from a Solar Maximum to a Solar Minimum period as well as with observed solar flare events. When retries are enabled in the system, single messages may be retransmitted and successfully passed, thus, only retry failures may affect the mission performance. Since mission inception, only one failed retry has occurred for SAMPEX. This data is in excellent agreement with the pre-flight prediction of one per seven years. Other missions currently

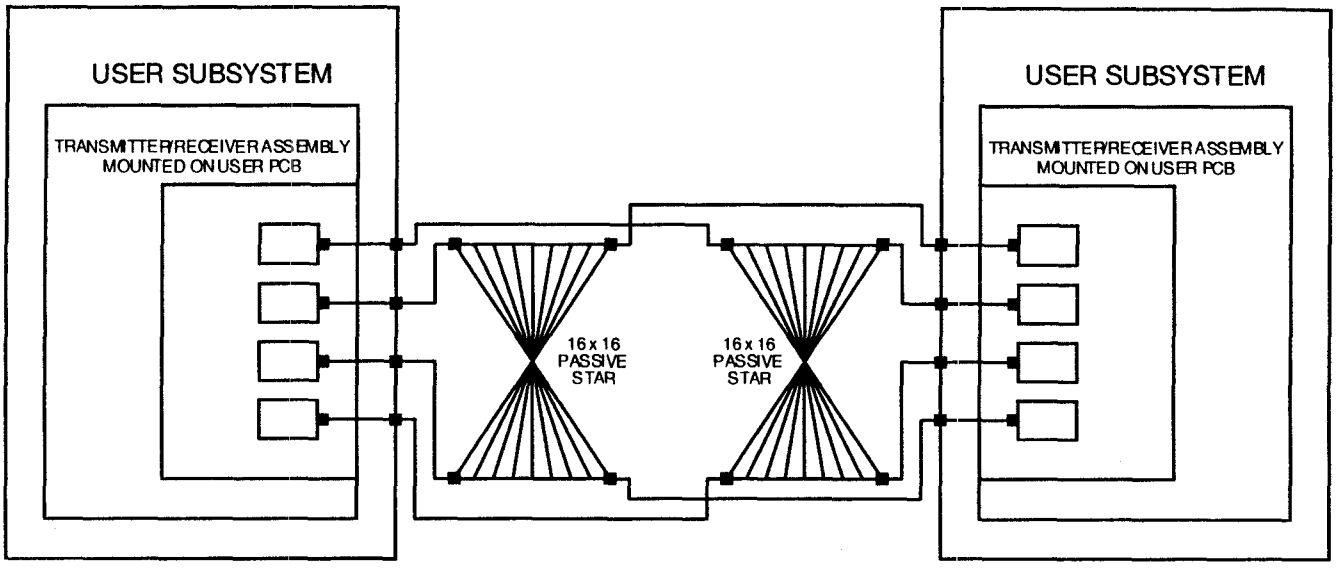

Figure 2. Two Representative Nodes of the SEDS fiber optic data bus segments.

utilizing MIL-STD-1773 technology include the X-ray Timing Explorer (XTE), and the Hubble Space Telescope (HST) Solid State Recorder (SSR). It should also be noted that Boeing's Photonics Space Experiment (PSE) utilized the same optical components as the SEDS 1773, but not in a MIL-STD-1773 application. This experiment was discussed in section 4.

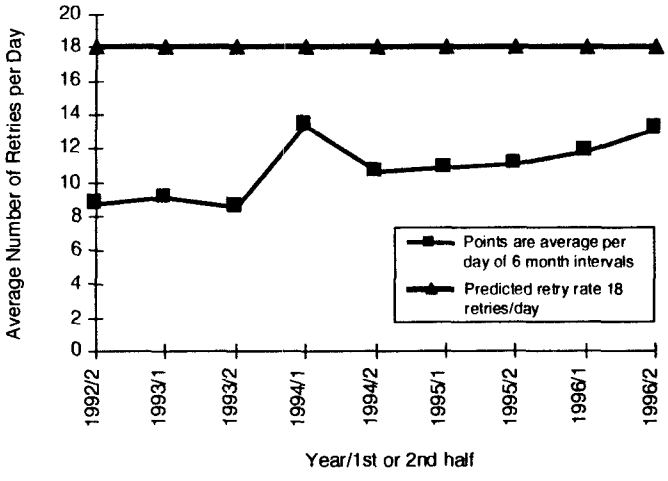

Figure 3. SAMPEX Fiber Optic Bus Retry Averages 1992-1996

Details on the HST SSR 1773 performance are noted in [31]. The HST SSR utilized a second-generation SEDS II 1773 terminal that utilized the same optical components as the original SEDS 1773 transceivers, but had some mechanical and electrical modifications. Information presented in [31] provided a comparison of test data for the two generations of 1773 bus modules as well as a correspondence of in-flight performance. The ground irradiation results and the flight performance for the two generations of devices are in essence equivalent. In addition, prediction techniques for 1773 message errors and single message retry failures using standard and novel techniques were discussed.

However, HST's SSR has observed a message retry failure rate that is orders of magnitude higher than predictions. It is believed that this is not a radiation-induced anomaly, but a latent defect in this particular implementation's design.

The AS1773 is an extension of the existing fiber optic bus protocol MIL-STD-1773 [17]. The AS1773 protocol specifies a Manchester II unipolar data encoding format for data transmission modulation at 1Mbps or 20Mbps on the AS1773 FODB. The main components of an AS1773 system include the hosts, protocol chips, fiber optic tranceivers, optical fibers, fiber optic connectors and optical star couplers. The protocol chip interfaces between the host and the tranceivers and controls message transfers over the AS1773 bus. The tranceivers convert optical signals to electrical signals to receive messages from the bus and convert electrical signals to optical signals to transmit messages over the bus. The AS1773 is a dual redundant bus utilizing two star couplers to implement an A and a B bus.

AS1773 has been used on the Microelectronics and Photonics TestBed (MPTB) flight experiment as described in [17]. This space experiment's sole purpose is to provide in-flight AS1773 performance characteristics in a harsh space radiation environment. On the other hand, the Mid-line Explorer series Microwave Anisotropy Probe (MAP) is the first mission to incorporate the AS1773 FODB as an in-line spacecraft system taking advantage of the higher 20Mbps data rate. Although flight data from these missions will not be available by the publishing of this paper,

significant ground irradiation test data have been taken and provide the means of predicting expected spaceflight performance. These ground irradiations have shown that the Boeing-developed AS1773 transceiver is relatively insensitive to proton-induced SEUs and that the error rate expected from such a system is "in the noise".

Several higher speed fiber optic data busses (FODBs) are currently being developed for consideration for spaceflight usage [22]. Ground irradiation test results on one such system have been thoroughly presented elsewhere [15], however we will summarize this system and it's prime radiation characteristics below. The system discussed is a Boeing-developed 200 Mbps STAR FODB. This is a 32-node passive star-coupled network based on the Society of Automotive Engineer's Linear Token Passing Bus architecture.

Both component and system proton irradiation tests were performed. The STAR FODB utilizes InGaAs detectors in a 1300 nm wavelength configuration. This photodiode is several orders of magnitude less sensitive to radiation-induced SEUs than the SEDS 1773 Si PIN photodiode as described in section 3. Key results of this investigation showed the in-flight usability of such a system when associated electronics are chosen to also minimize their SEU sensitivity such that the on-orbit BER is in the acceptable range. This is an important point to note when comparing these results to those in section 6.

7. Ground Radiation Evaluation of High-Speed Commercial Fiber Optic Links

With DoD and NASA's directives to utilize commercial-off-the-shelf (COTS) technologies where feasible, investigations of commercial fiber optic links and systems have been undertaken. In many of these applications, the most radiation sensitive component is not the optical devices, but the electronics associated with interfacing the optics to a typical user's subsystem electronics. In particular, the electronics SEEs and their contribution to a system bit error rate (BER) is a concern. As mentioned in section 2, the associated electronics often provide some of communication protocol layers required to transfer data between system nodes (either point-to-point or via a network configuration) or as data buffers or voltage level translators. We will summarize examples of these results and issues below.

Meshel, et al [15] investigated the use of a commercial AT&T ODL-250 optical fiber data link by performing energetic proton irradiations. The transmitter of this link consisted of a InGaAsP LED and a microwave complementary bipolar integrated circuit (MCBIC), while the receiver utilizes a InGaAs photodiode and two MCBIC devices. The link is ECL-compatible and operates at a 1300nm wavelength. The results of this investigation showed the potential spaceflight usability of such a link as a physical media noting the single event variances with optical power budget issues, as well as observing proton beam incident angular, proton energy, and link data rate variations.

LaBel, et al [33, 34] explored a similar device from AT&T (the ODL-200), but included a system-level study of an associated commercial GaAs transmitter and receiver protocol ICs from Gazelle Microcircuits (known as the Hot Rod chipset) and their effect on system BER when combined with the ODL-200. A block diagram of this system is shown in Figure 4. It is noted that the ODL-200 utilizes the same basic internal configuration as the ODL-250. Proton irradiation and heavy ion SEE test results showed two interesting results beyond [15]. The first was that these particular protocol devices would dominate the system BER in a space radiation environment with nearly an order of magnitude increased sensitivity to proton and heavy ion induced SEEs. The second novel result was that the MCBIC devices of the ODL-200 modules were in fact a prime cause of bit errors during irradiation and not simply the optical components. LaBel et al., [34] also provided a means of evaluating system BERs for fiber links in space and, thus, concluded that for many applications the radiation-induced BERs for this system were acceptable.

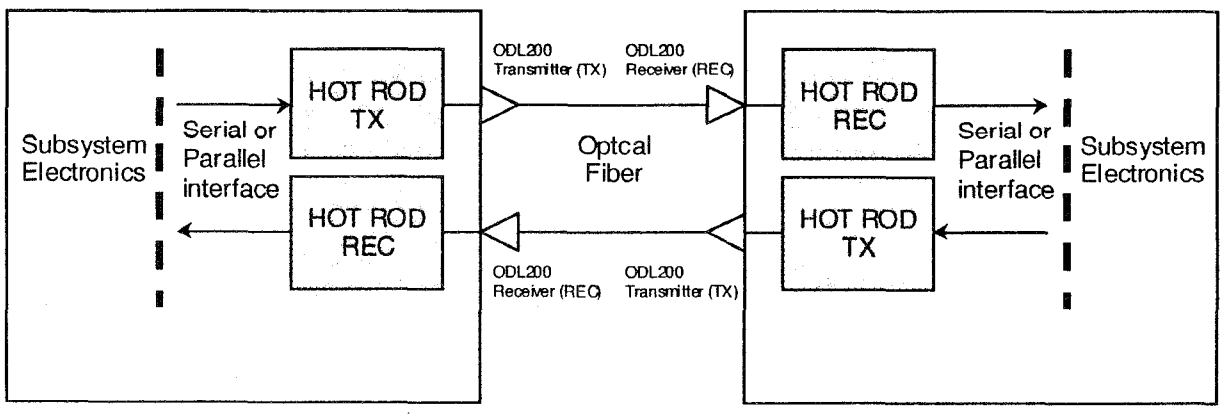

Figure 4. Fiber Optic System of Interest

One final note from [33] concerns a discussion of microelectronics technologies and their potential impacts on fiber optic link BERs. Commercial GaAs, ECL, and reduced voltage CMOS were considered to have a great impact on the system BER, while potential new technologies such as C-HIGFET GaAs might be more advantageous.

As summarized in [35], higher wavelength optical components (1300 and 1550 nm) tend to be better choices to minimize fiber optic link BER than a lower wavelength system that utilizes a 850 nm bandgap.

This again implies the need for the relative SEE-hardness of the associated electronics in order to meet system-level requirements. Consideration of the choice of data buffer, protocol, and voltage level translators thus become critical to the system design and application success in space.

Recent work by Marshall, et al [36] discussed single event proton irradiation of commercial Fiber Channel (FC) transmitters and receivers. FC is an ANSI-standard, high performance serial stream mix of point-to-point and network topologies. ICs from AT&T that provided physical and link layers of the FC protocol as well as devices from Force, Inc that provide simply the physical layer were evaluated. This 1300 nm wavelength system has several speed-gradiations from the 100's of Mbps to over one Gbps. As observed with other commercial fiber optic systems, the most radiation-sensitive portion of the link was in the electronics. For the Force devices, the bit error sensitivity was low, however, a repeatable condition high-current failure in the transmitter module's support electronics was observed. For the AT&T devices, again the optical components provided a relatively low BER, but errors occurred in the control logic portion of the associated electronics that would be difficult to mitigate during spaceflight operations. Thus for these FC devices, the microelectronics were again shown to be the limiting factor in usage in the space radiation environment.

What all these commercial fiber link systems show is relatively straight-forward: despite utilizing fairly radiation-tolerant optical components (1300 nm), the support electronics needs to be radiation-tolerant as well.

8. A Speed Scaled Future

Recent development efforts for higher rate busses include the Boeing STAR bus for 20-400 Mbps/s transmission [37, 38] and the TRW/Honeywell RING bus for 20-3200 Mbps/s operation [39-41]. Each of these bus designs supports up to 32 nodes and will use 1300 nm multimode components. System level testing has been performed on the STAR bus [42], and the RING is a potential candidate for a current NASA mission.

Future demands for significant on board computing, the transfer and routing of large volumes of sensor data require well over multi Gbps per second bandwidth and drive the need for ever more capable communication links on board spacecraft. Technology advances in materials, sources, detectors, connectors, high speed microelectronics and packaging will make this possible. In addition, parallel architectures are being developed which are made possible by advances in areas such as laser and waveguide technology. Next, we will describe several technology thrusts that will enable future higher performance links.

Recent advances in GaAs, SiGe, InP and deep submicron Silicon-On-Insulator(SOI) device technology provide Gbps to tens of Gbps operating frequencies, and radiation effects evaluations are underway. Conventional alternative high speed technologies such as GaAs MESFET or silicon ECL impose severe power penalties along with unacceptable SEU rates for many satellite applications [43]. FET-based GaAs ICs have shown excellent immunity to Total Ionizing Dose (TID) and latchup effects [44]. However FET-based digital ICs are severely limited in space-based applications due to the susceptibility of the technology to Single Event Upset (SEU). Previous work [45] has demonstrated extraordinary SEU hardening achieved using a Honeywell-grown LT layer underneath C-HIGFET shift registers and flip-flops. (The Heterostructure Insulated Gate FET (HIGFET) is used among other reasons to substantially reduce gate leakage.) Although no upsets were observed for LETs as high as 90 MeV*cm2/mg, we note that only 1 shift register and 1 flipflop were tested. More recently, significant SEU hardening has been demonstrated for the faster Motorola C-GaAs process operating as high as 300 MHz [46]. The 0.7 micrometer n-channel HIGFET C-GaAs process has been shown to be SEE tolerant well at data rates well in excess of 1 Gbps/s.

InP and SiGe HBT technologies are also extremely hard to TID effects. Radiation evaluations of Hughes InP HBT technology also show promising SEE behavior, and further work is underway to evaluate their SEE performance up to data rates of near 10 GHz, although the technology is capable of speeds in excess of 20 GHz. In the silicon arena, greater than 1 Gbps/s performance has been demonstrated with deep submicron SOI technology, and radiation effects evaluations are planned.

New detector technologies and levels of receiver integration are being developed. For example, state-of-the-art high speed MSM photodiodes are compatible with planar FET technology enabling the production of a monolithic low noise high bandwidth receiver. The MSM is a variation on the Schottky barrier diode in which the active region is a two-dimensional depletion region near the metal contact that results in high electron mobility and high frequency operation. Lithography improvements have led to shorter carrier transit times and lower capacitances devices so that device operation in excess of 100 GHz has been demonstrated. Multi-gigahertz devices are readily available and radiation testing of these devices has begun. Although the quantum efficiency of the MSM diode is inferior as compared to PIN diodes, the advantages of monolithic integration make them attractive for some applications.

The Vertical Cavity Surface Emitting Laser (VCSEL) represents a recent enabling optical-source technology for short haul (interconnect) parallel data transmission as

opposed to the current serial links described above. Currently, edge emitting lasers are being used in most fiber optic communications systems, although commercial fiber channel hardware employing VCSELs is becoming available and will be radiation tested in the near future. However, in contrast to edge emitting lasers, VCSELs are being developed with single longitudinal mode emission, low threshold current, and low divergence circular output beams that make them particularly attractive for low power optical communications. These features as well as the facts that the laser mirrors are monolithic, and that the lasers can be tested on wafer, will result in great cost savings in the manufacture of such links. The unique vertical geometry of the VCSEL enables one- and two-dimensional arrays to be employed for highly parallel architectures that provide large aggregate bandwidths with individual links at moderate data rates. Development of VCSEL technology capable of WDM operation would further enhance the throughput of optical communications links. There is also interest in integrating VCSEL technology with FETs and detectors to make a monolothic Smart Pixel Array (SPA) for use in future systems.

Work is underway to perform a radiation evaluation of the DARPA funded optical link built by Honeywell. It is comprised of 32 element VCSEL array source coupled with a polymer waveguide to the receiver. Manufacturing, size and weight constraints will prevent the use of optical fiber for highly parallel systems on future spacecraft. This system already represents a significant reduction in both power and weight as compared to the earlier FODB STAR and RING MCMs that implement edge-emitting fibers coupled into multimode fiber.

To summarize, we have described several promising technology advances being evaluated for next generation optical busses for intra-satellite communications. It is important that radiation evaluations of these new technologies is performed in parallel to provide the engineering community with a more accurate trade space so that technology developments can be effectively targeted.

9. Summary and Conclusions

The intention of the authors is to provide an overview of the use, past to future, of fiber optic links as a means of communication among a spacecraft's subsystems and instruments. As such, a discussion is given of multiple background areas including the major advantages of migrating to fiber optic systems in space and the physical components involved in such a system.

The prime focus, however, is the discussion of the performance of fiber optic links in the natural space radiation environment. In this regard, this paper provides a brief overview of the body of knowledge on the radiation effects issues involved with these types of systems, a summary of early flight systems and experiments, and a description of currently implemented fiber optic data busses and their in-flight performance (where known). The final discussion is on the future enabling technologies and their potential to increase fiber optic (and other) system performance as well as their radiation issues.

In conclusion, the use of fiber optics on-board spacecraft continues to increase in order to meet stringent spacecraft performance and other requirements. With proper and judicious design based on both system needs and device radiation effects responses, spacecraft will continue to successfully utilize this emerging technology.

10. Acknowledgments

The authors would like to gratefully thank our sponsors at NASA headquarters (Codes Q and SM) and at the Defense Special Weapons Agency. We would also like to thank Martha O'Bryan from Jackson and Tull Chartered Engineers, Inc. without whom this document would not have been possible.

11. REFERENCES

[1] E. J. Friebele, "Survivability of Photonic Systems in Space" *DoD Fiber Optics Conference, McLean VA*, March 24-27, 1992.

[2] M. Ott, J. Plante, J. Shaw, M. A. Garrison Darrin "Fiber Optic Cable Assemblies for Space Flight: Issues and Remedies," Paper number 975592 AIAA/SAE World Aviation Congress, Anaheim, CA 1997.

[3] M. Ott "Capabilities and Reliability of LEDs and Laser Diodes" Internal NASA Parts and Packaging Publication, April 25, 1996, Updated August 1997.

[4] C. E. Barnes "Technology Assessment: Radiation Hardened Fiber Optic and Optoelectronic Devices and Systems," Report to the Defense Nuclear Agency, April 1992.

[5] Paul W. Marshall, Cheryl J. Dale, E. Joseph Friebele, and Kenneth A. LaBel, "Survivable Fiber-Based Data Links for Satellite Radiation Environments," *SPIE Critical Review CR-14, Fiber Optics Reliability and Testing, 189-231*, 1994.

[6] E.J. Friebele, K.J. Long, C.G. Askins, M.E. Gingerich, M.J. Marrone, and D.L. Griscom, "Overview of radiation effects in fiber optics," *Crit. Rev. Tech.: Opt. Materials in Radiation Environments (SPIE Vol. 541)*, P. Levy and E.J. Friebele, Ed. (SPIE, Bellingham, WA), *70-88*, 1985.

[7] D.L. Griscom, M.E. Gingerich, and E.J. Friebele, "Model for Dose, Dose-Rate, and Temperature Dependence of Radiation Induced Loss in Optical Fibers," *IEEE Trans. Nucl. Sci. NS-41, 3, 523-527*, 1994.

[8] C. Barnes, L. Dorsky, A. Johnston, L. Bergman and E. Stassinopoulos, "Overview of fiber optics in the natural space environment," *Fiber Optics Reliability: Benign and Adverse Environments IV, Proc. SPIE, Vol. 1366, 9-16*, 1990.

[9] J. D. Weiss, "The Radiation Response of a Selfoc Microlens", *J. Lightwave Tech, Vol. 8, No. 7, 1107-1109*, 1990.

[10] C.E. Barnes and J.J. Wiczer, "Radiation Effects in

Optoelectronic Devices", *Sandia Report, SAND84-0771*, 1984.

[11] C.E. Barnes, "Radiation Hardened Optoelectronic Components: Sources", *Proc. SPIE, Vol. 616, 248-252*, 1986.

[12] J.J. Wiczer, "Radiation Hardened Optoelectronic Components: Detectors", *Proc. SPIE, Vol. 616, 254-266*, 1986.

[13] P.W. Marshall, C.J. Dale, and E.A. Burke, "Space radiation effects on optoelectronic materials and components for a 1300 nm fiber optic data bus," *IEEE Trans. Nucl. Sci., NS-39, No. 6, 1982-1989*, 1992.

[14] Paul Marshall, Joe Cutchin, and Todd Weatherford, "Space Radiation Effects in a GaAs C-HIGFET Logic Family Suitable for Satellite Data Transmission Above 1 Gbps," *GOMAC 93 Conference Proceedings, 227-229.*

[15] Cheryl J. Dale, Paul W. Marshall, Martin E. Fritz, Michael de La Chapelle, Martin A. Carts, and Kenneth A. LaBel, "System Level Radiation Response of a High Performance Fiber Optic Data Bus", *Proceedings of RADECs 95, IEEE Catalog No. 95TH8147, 531-538*, Sep 1995.

[16] Kenneth A. LaBel, Donald K. Hawkins, James A. Cooley, Christina M. Seidleck, Paul Marshall, Cheryl Dale, Michele M. Gates, Hak S. Kim, and E.G. Stassinopoulos, "Single Event Effect Ground Test Results for a Fiber Optic Data Interconnect and Associated Electronics," *IEEE Trans. Nucl. Sci., NS-41, No. 6, p.1999-2004*, 1994.

[17] Kenneth A. LaBel, Cheryl J. Marshall, Paul W. Marshall, George L. Jackson, Mark Flanegan, and Donald Thelen, "MPTB Radiation Effects Study on the DR1773 Fiber Optics Data Bus", submitted for publication in the *IEEE Trans. on Nuc. Sci., Vol. 44*, Dec. 1997.

[18] Kenneth A. LaBel, Paul Marshall, Cheryl Dale, Christina M. Crabtree, E.G. Stassinopolous, Jay T. Miller and Michele M. Gates, "SEDS MIL-STD-1773 Fiber Optic Data Bus: Proton Irradiation Test Results and Spaceflight SEU Data", *IEEE Trans. Nucl. Sci. NS-40, (6), 1638-1644*, 1993.

[19] D.C. Meshel, G.K. Lum, P.W. Marshall, and C.J. Dale, "Proton Testing of InGaAsP Fiber Optic Transmitter and Receiver Modules," *IEEE Radiation Effects Workshop Proceedings, NSREC 64-76*, 1994.

[20] Paul Marshall, Cheryl Dale, and Ken LaBel, "Charged Particle Effects on Optoelectronic Devices and Bit Error Rate Measurements on 400 Mbps Fiber Based Data Links," *RADECS Conference Proceedings, Saint Malo, France, 266-271*, September 13-16, 1993.

[21] P. W. Marshall, C. J. Dale, M.A. Carts, and K.A. LaBel, "Particle-Induced Errors in High Performance Data Links for Satellite Data Management," *IEEE Trans. Nucl. Sci. NS-41, (6), 1958-1965*, 1994.

[22] Anthony F. Jordan, "On the Brink: Fiber Optic LANs for Avionics and Space", *Defense Electronics, Vol. 25, No. 11, 43-47*, 1993.

[23] K. A. LaBel, and M. M. Gates, "Single-Event-Effect Mitigation from 9 System Perspective", *IEEE Trans. Nucl. Sci., NS-42, No. 2, 654-660*, April 1996.

[24] A.R. Johnston and E.W. Taylor, "A survey of the LDEF fiber optic experiments," Jet Propulsion Laboratory Report D-10069, November 10, 1992.

[25] E.W. Taylor, J.N. Berry, A.D. Sanchez, R.J. Padden, and S.P. Chapman, "Preliminary analysis of PL experiment #701, space environment effects on operating fiber optic systems," in LDEF-69 Months in Space- First Post Retrieval Symposium, Report No. NASA CP-3134, pp. 1257-1282, 1991.

[26] M.E. Fritz et al., "The Boeing Photonics Space Experiment," SPIE Proceedings, Vol. 1953, pp. 116-126, April 1993.

[27] M.E. Fritz, G. Berg, D.A. Cross, and M.C. Wilkinson, "Photonics space experiment on-orbit results," SPIE Proceedings, Vol. 2811, pp. 106-115, August 1996.

[28] The COBE datasets were developed by the NASA Goddard Space Flight Center under the guidance of the COBE Science Working Group and were provided by the NSSDC.

[29] Gregg Berman and Art Champagne, "A Study of the Effects of Cosmic Radiation on Photodiodes Used by the COBE Spacecraft", unpublished test report, Jan. 12, 1990.

[30] K.A. LaBel, P. Marshall, C. Dale, C.M. Crabtree, E.G. Stassinopoulos, J.T. Miller, and M.M. Gates, "SEDS MIL-STD-1773 fiber optic data bus: Proton irradiation test results and spaceflight SEU data", *IEEE Trans. on Nuc. Sci., Vol. NS-40, 1638-1644*, Dec. 1993.

[31] Kenneth A. LaBel, Robert Reed, Henning Leidecker, Janet Barth, Paul W. Marshall, Cheryl J. Marshall, Christina M. Seidleck, "Comparison of MIL-STD-1773 Fiber Optic Data Bus Terminals: Single Event Proton Test Irradiation, In-flight Space Performance, and Prediction Techniques", submitted for publication in the *IEEE Proceedings of RADECS97*, Sep 1997.

[32] D.C. Meshel, G.K. Lum, and P. W. Marshall, "Radiation Testing of a InGaAsP Fiber Optic Transmitter and Receiver Modules", *Workshop Record of the 1993 IEEE Radiation Effects Data Workshop, IEEE Catalog No. 93TH0657-7, 64-76*, July 1993.

[33] Kenneth A. LaBel, Paul W. Marshall, Cheryl J. Dale, E.G. Stassinopoulos, Allan Johnston, Christina M. Crabtree, and Hak S. Kim, " *Single Event Effects on Associated Electronics for Fiber Optic Systems", Proceedings SPIE, Vol. 2215, 74-93*, April 1994

[34] K.A. LaBel, D.K. Hawkins, J.A. Cooley, C.M. Seidleck, P. Marshall, C. Dale, M.M. Gates, H.S. Kim, and E.G. Stassinopoulos, "Single event ground test results for a fiber optic data interconnect and associated electronics", *IEEE Trans. on Nuc. Sci, Vol. NS-41, 1999-2004*, Dec. 1994.

[35] P.W. Marshall, C.J. Dale, K.A. LaBel, "Space radiation effects in high performance fiber optic data links for satellite management", *IEEE Trans. on Nuclear Science, vol 43, no. 2, 645-653*, April 1996.

[36] Paul W. Marshall, Martin A. Carts, Cheryl J. Marshall, Kenneth A. LaBel, Mark Flanegan, Joy Bretthauer, "Single event test methodology and radiation test results of commercial gigabit per second (Gbps) fiber optic data links", submitted for publication in the *IEEE*

Trans. on Nuclear Science, vol 44, Dec. 1997.

[37] Michael de La Chapelle, Arthur W. Van Ausdale, and Martin E. Fritz, "The STAR-FODB (Fiber Optic Data Bus) Program", *GOMAC 93 Conference Proceedings, 395*, 1993.

[38] M.E. Fritz, M. de la Chapelle, and A.W. Van Ausdal, "Boeing's STAR-FODBtest results," *SPIE Proceedings, Vol. 2482, 226-235*, April 1995.

[39] Julian Bristow and John Lehman, "Component Tradeoffs and Technology Breakpoints for a 50 Mbps to 3.2 Gbps Fiber Optic Data Bus for Space Applications," *Proc. SPIE, Vol. 1953, 159-169*, 1993.

[40] John DeRuiter, "Survivable ring architecture for spaceborne applications", *Proc. SPIE, Vol. 1953, 128-135*, 1993.

[41] S. Gross, "ATM-Based Protocol for Gbps Ring Networks", *GOMAC 93 Conference Proceedings, 399*, 1993.

[42] Cheryl J. Dale, Paul W. Marshall, Martin E. Fritz, Michael de La Chapelle, Martin A. Carts, and Kenneth A. LaBel, "System Level Radiation Response of a 200 Mbps Star-Coupled Fiber Optic Data Bus," *IEEE Trans. Nucl. Sci., Vol. 43, No. 3, 1030*, 1996.

[43] Paul W. Marshall, Cheryl J. Dale, Todd R. Weatherford, Michael La Macchia, and Kenneth A. LaBel, "Particle-Induced Mitigation of SEU Sensitivity in High Data Rate GaAs HIGFET Technologies," *IEEE Trans. Nucl. Sci., NS-42, 6, 1844*, 1995.

[44] B.W. Hughlock, G.S. LaRue, and A.H. Johnston "Single-event upset in GaAs E/D MESFET logic," *IEEE Trans. Nucl. Sci., NS-37, 1894*, 1990.

[45] Paul W. Marshall, Cheryl J. Dale, Todd R. Weatherford, Martin Carts, Dale McMorrow, Andy Peczalski, Steve Baier, James Nohava, and John Skogen, "Heavy Ion Immunity of a GaAs Complementary HIGFET Circuit Fabricated on a Low Temperature Grown Buffer Layer," *IEEE Trans. Nucl. Sci., NS-42, 6, 1850*, 1995.

[46] T. R. Weatherford, P.W. Marshall, C.J. Marshall, D. J. Fouts, B. Mathes and M. LaMacchia, "Effects of Low Temperature Buffer Layer Thickness and Growth Temperature on the SEE Sensitivity of GaAs HIGFET Circuits," Accepted for publication in *IEEE Trans. Nucl. Sci., NS-44, 6*,1997.

***Mr. LaBel** is Group Leader for the Radiation Effects and Analysis Group at NASA Goddard Space Flight Center (GSFC). He has been at GSFC since 1983 and has worked in such diverse areas as ground system design, spaceflight computers and data systems, fiber optic system development, and radiation effects. Mr. LaBel has worked in the radiation effects arena since 1990 and has authored or co-authored over 30 publications ranging from the use and analysis of commercial microelectronics in the space radiation environment to ground and spaceflight experimentation on emerging technologies. Mr. LaBel is an IEEE member and is currently the Senior Member-at-Large for the IEEE Radiation Effects Steering Group.*