OMH3075 TID TEST REPORT V1

Optek Hall Effect Sensor from Optek Technology

Anthony B. Sanders[1], Hak S. Kim[2], Anthony Phan[2]

[1] NASA GSFC
[2] MEI Technologies

Test Date(s): February 28, 2007 Report Date: April 27, 2007

1. Introduction

Total Ionizing Dose (TID) was performed on the Optek Hall Effect Sensor OMH3075S at the NASA GSFC Co^{60} Radiation Effects Facility (REF) for the Sample Analysis at Mars (SAM) Instrument.

2. Device Description

The OMH3075S from Optek Technology is a high reliability hallogic Hall Effect sensor.

Table I.
OMH3075 Device and Test Information

Generic Part Number:	OMH3075
Full Part Number	OMH3075S
Manufacturer:	Optek Technology
Lot Date Code (LDC):	M0551
Quantity Tested:	6
Serial Numbers of Control Sample:	C
Serial Numbers of Radiation Samples:	1,2,3,4,5,6
Part Function:	Bipolar latch
Part Technology:	Bipolar
Package Style:	3 pin ceramic
Test Equipment:	Parametric Analyzer, single power supply
Test Engineer:	Hak Kim and Anthony Phan
Principal Investigator:	Anthony Sanders
Dose Levels (krad (Si))	5, 10, 15, 20, 30, 35, and 40
Target dose rate (rad (Si)/sec)	0.02 rads/sec

3. Test Method

There were seven devices. Six devices were exposed using the GSFC Co^{60} source per MIL-STD-883 Method 1019.6; one device was used as a control. The dose levels were 5, 10, 15, 20, 30, 35, and 40krad (Si), at a dose rate of approximately 0.02 rad (Si)/sec. At each dose level the devices were characterized by using a gauss meter to measure device specifications. The magnetic strength, output saturation voltage, and supply current was measured with the sensor in the on and off conditions. During exposure to the gamma rays, the devices were biased with Vcc at 24V.

Pin #	Description
1	V_{CC}
2	Ground
3	Output

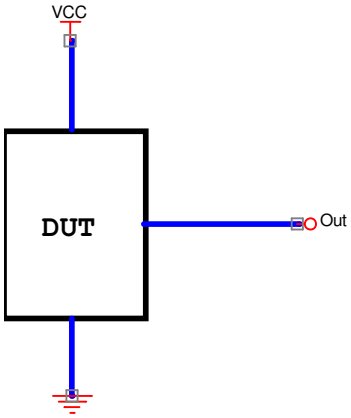

Figure 1. Optek OMH3075S

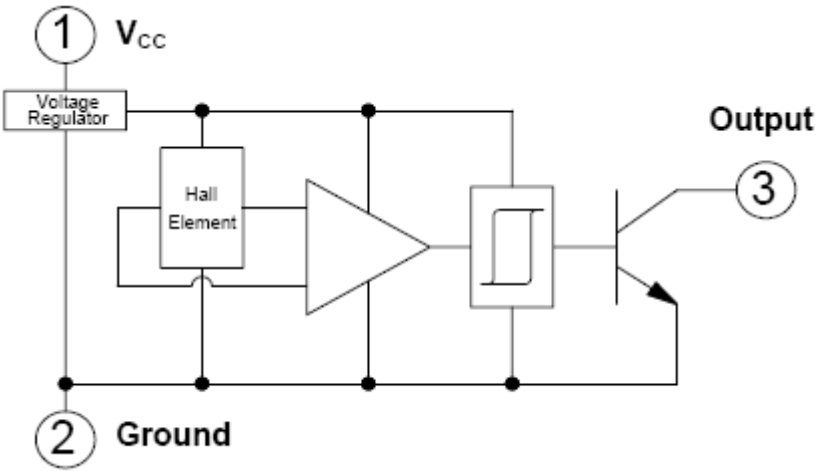

Figure 2. Optek OMH3075S Functional Block Diagram

Table II.
Electrical Characteristics

Electrical Characteristics (Vcc = 4.5 V to 24 V, T_A = 25° C unless otherwise noted)
OMH090, OMH090B, OMH090S Uni-Polar

SYMBOL	PARAMETER	MIN	TYP	MAX	UNITS	TEST CONDITIONS
B_{OP}	Magnetic Operate Point(1)	50	90	180	Gauss	+25°C
B_{RP}	Magnetic Release Point	30	60	160	Gauss	+25°C
B_H	Magnetic Hysteresis	5	30	70	Gauss	+25°C
Icc	Supply Current	-	5	9	mA	V_{cc} = 24 V, Output On, B ≤ 250 Gauss
V_{OL}	Output Saturation Voltage	-	125	300	mV	V_{cc} = 4.5 V, I_{OL} = 20 mA, B ≥ 250 Gauss
I_{OH}	Output Leakage Current	-	0.50	10	µA	V_{cc} = 24 V, V_{OUT} = 24 V, B ≤ 250 Gauss
t_r	Output Rise Time	-	0.13	1.00	µs	R_L = 820 Ω, C_L = 20 pF, V_{cc} = 14 V (guaranteed not tested)
t_f	Output Fall Time	-	0.19	1.00	µs	R_L = 820 Ω, C_L = 20 pF, V_{cc} = 14 V (guaranteed not tested)

The following electrical parameters are to be measured according to Table II:

B_{OP} (magnetic operate point, off to on condition)
B_{RP} (magnetic release point, on to off condition)
I_{CC} (Supply Current)
V_{OL} (output saturation voltage)

4. Results

Table III shows the measurements for supply current and output saturation voltage with respect to magnetic strength. These measurements were taken with the switch in the on and off conditions up to 40krads.

Table III.
OMH3075 Test Condition Measurements

OMH3075 Test Condition Measurements

PreRAD

DUT #	Switch OFF | ON	Magnet Strength GAUSS	Icc (mA)	Vcc (V)	Vol at Vsat = 4.5V (mV)
DUT C	On	12.2	6.8	24	164.9
DUT C	Off	-9.9	4.6	24	N/A
DUT 1	On	11.6	6.8	24	156
DUT 1	Off	-9.4	4.6	24	N/A
DUT 2	On	10.3	6.8	24	180.5
DUT 2	Off	-11.5	4.6	24	N/A
DUT 3	On	11.4	6.8	24	159.7
DUT 3	Off	-8.5	4.6	24	N/A
DUT 4	On	12.2	6.8	24	157.7
DUT 4	Off	-8.5	4.6	24	N/A
DUT 5	On	10.9	6.8	24	159.7
DUT 5	Off	-9.9	4.6	24	N/A
DUT 6	On	12.7	6.8	24	158.7
DUT 6	Off	-7.6	4.6	24	N/A

5KRAD

DUT #	Switch OFF | ON	Magnet Strength GAUSS	Icc (mA)	Vcc (V)	Vol at Vsat = 4.5V (mV)
DUT C	On	12.3	6.8	24	161.8
DUT C	Off	-9.3	4.6	24	N/A
DUT 1	On	12.3	6.8	24	163.9
DUT 1	Off	-10.2	4.6	24	N/A
DUT 2	On	11	6.8	24	181.5
DUT 2	Off	-12.5	4.6	24	N/A
DUT 3	On	12.1	6.8	24	162.9
DUT 3	Off	-9.4	4.6	24	N/A
DUT 4	On	12.8	6.8	24	164.9
DUT 4	Off	-9.3	4.6	24	N/A
DUT 5	On	11.7	6.8	24	164.9
DUT 5	Off	-10.5	4.6	24	N/A
DUT 6	On	13.5	6.8	24	161.8
DUT 6	Off	-8.9	4.6	24	N/A

10KRAD

DUT #	Switch OFF | ON	Magnet Strength GAUSS	Icc (mA)	Vcc (V)	Vol at Vsat = 4.5V (mV)
DUT C	On	12.1	6.8	24	163
DUT C	Off	-9.2	4.6	24	N/A
DUT 1	On	12.9	6.8	24	168
DUT 1	Off	-10.1	4.6	24	N/A
DUT 2	On	10.8	6.3	24	188.3
DUT 2	Off	-12.9	4.6	24	N/A
DUT 3	On	12.8	6.8	24	166
DUT 3	Off	-10	4.6	24	N/A

DUT 4	On	13.6	6.8	24	167
DUT 4	Off	-9.1	4.6	24	N/A
DUT 5	On	12.3	6.3	24	169.1
DUT 5	Off	-10.6	4.6	24	N/A
DUT 6	On	14	6.8	24	167
DUT 6	Off	-9	4.6	24	N/A

15KRAD

DUT #	Switch OFF | ON	Magnet Strength GAUSS	Icc (mA)	Vcc (V)	Vol at Vsat = 4.5V (mV)
DUT C	On	12.1	6.8	24	164.9
DUT C	Off	-1.2	4.6	24	N/A
DUT 1	On	13	6.3	24	170.1
DUT 1	Off	-10.2	4.6	24	N/A
DUT 2	On	11.9	6.3	24	190.9
DUT 2	Off	-13.9	4.6	24	N/A
DUT 3	On	13.7	6.3	24	174.3
DUT 3	Off	-10.1	4.6	24	N/A
DUT 4	On	13.8	6.3	24	170.1
DUT 4	Off	-9.9	4.6	24	N/A
DUT 5	On	12.9	6.3	24	172.2
DUT 5	Off	-11.4	4.6	24	N/A
DUT 6	On	15.2	6.3	24	176.3
DUT 6	Off	-9.2	4.6	24	N/A

20KRAD

DUT #	Switch OFF | ON	Magnet Strength GAUSS	Icc (mA)	Vcc (V)	Vol at Vsat = 4.5V (mV)
DUT C	On	14.4	6.8	24	170.3
DUT C	Off	-9.9	4.6	24	N/A
DUT 1	On	13	6.3	24	174.3
DUT 1	Off	-10.3	4.6	24	N/A
DUT 2	On	12.3	6.3	24	189.8
DUT 2	Off	-14.5	4.6	24	N/A
DUT 3	On	13.4	6.3	24	169.1
DUT 3	Off	-10.4	4.6	24	N/A
DUT 4	On	14.1	6.3	24	171.1
DUT 4	Off	-9.9	4.6	24	N/A
DUT 5	On	13.1	6.3	24	175.3
DUT 5	Off	-11.3	4.6	24	N/A
DUT 6	On	13	6.3	24	160.8
DUT 6	Off	-10.5	4.6	24	N/A

25KRAD

DUT #	Switch	Magnet Strength	Icc	Vcc	Vol at Vsat = 4.5V

	OFF | ON	GAUSS	(mA)	(V)	(mV)
DUT C	On	15	6.8	24	176.3
DUT C	Off	-9.8	4.6	24	N/A
DUT 1	On	13.1	6.3	24	173.2
DUT 1	Off	-10.7	4.6	24	N/A
DUT 2	On	12.4	6.3	24	188.8
DUT 2	Off	-14.4	4.6	24	N/A
DUT 3	On	14.2	6.3	24	174.3
DUT 3	Off	-10.7	4.6	24	N/A
DUT 4	On	14.6	6.3	24	172.2
DUT 4	Off	-10	4.6	24	N/A
DUT 5	On	13.2	6.3	24	179.4
DUT 5	Off	-11.5	4.6	24	N/A
DUT 6	On	13.8	6.3	24	162
DUT 6	Off	-10.6	4.6	24	N/A

30KRAD

DUT #	Switch OFF | ON	Magnet Strength GAUSS	Icc (mA)	Vcc (V)	Vol at Vsat = 4.5V (mV)
DUT C	On	15.2	6.8	24	174.3
DUT C	Off	-9.2	4.6	24	N/A
DUT 1	On	14	6.3	24	174.3
DUT 1	Off	-10.7	4.6	24	N/A
DUT 2	On	12.5	6.3	24	189.8
DUT 2	Off	-14.3	4.6	24	N/A
DUT 3	On	14.2	6.3	24	172.2
DUT 3	Off	-10.5	4.6	24	N/A
DUT 4	On	13	6.3	24	174.3
DUT 4	Off	-11.3	4.6	24	N/A
DUT 5	On	14.3	6.3	24	175.3
DUT 5	Off	-9.9	4.6	24	N/A
DUT 6	On	13.6	6.3	24	166
DUT 6	Off	-11.3	4.6	24	N/A

35KRAD

DUT #	Switch OFF | ON	Magnet Strength GAUSS	Icc (mA)	Vcc (V)	Vol at Vsat = 4.5V (mV)
DUT C	On	14.9	6.8	24	172.2
DUT C	Off	-9.1	4.6	24	N/A
DUT 1	On	14.4	6.3	24	177.4
DUT 1	Off	-11.4	4.6	24	N/A
DUT 2	On	14.1	6.3	24	178.4
DUT 2	Off	-9.8	4.6	24	N/A
DUT 3	On	13	6.3	24	179.4
DUT 3	Off	-11.2	4.6	24	N/A
DUT 4	On	14.1	6.3	24	176.3
DUT 4	Off	-10.3	4.6	24	N/A

DUT 5	On	12.2	6.3	24	188.8
DUT 5	Off	-14.2	4.6	24	N/A
DUT 6	On	14	6.3	24	175.3
DUT 6	Off	-10.5	4.6	24	N/A

40KRAD					
DUT #	**Switch** OFF | ON	**Magnet Strength** GAUSS	**Icc** (mA)	**Vcc** (V)	**Vol at Vsat = 4.5V** (mV)
DUT C	On	14.2	68	24	173.3
DUT C	Off	-9.3	4.6	24	N/A
DUT 1	On	12.8	6.3	24	191.9
DUT 1	Off	-10.3	4.6	24	N/A
DUT 2	On	11.5	6.3	24	196
DUT 2	Off	-13.3	4.6	24	N/A
DUT 3	On	13.2	6.3	24	185.7
DUT 3	Off	-9.4	4.6	24	N/A
DUT 4	On	13.8	6.3	24	186.9
DUT 4	Off	-9.6	4.6	24	N/A
DUT 5	On	12.8	6.3	24	187.7
DUT 5	Off	-10.7	4.6	24	N/A
DUT 6	On	13.9	6.3	24	182.6
DUT 6	Off	-11.2	4.6	24	N/A

5. Conclusion

The OMH3075S meets all specifications for supply current and output saturation voltage up to a TID of 40krad (Si).

Datasheet:

http://www.optekinc.com/pdf/OMH090-3075.pdf