A Study of the SEU Performance of InP and SiGe Shift Registers

D. L. Hansen, P. W. Marshall, R. Lopez-Aguado, K. Jobe,

M. A. Carts, C. J. Marshall, P. Chu, S. F. Meyer

***Abstract*—Shift registers fabricated using InP and SiGe technology are tested for SEU performance when irradiated with protons and heavy ions. The results are compared to several different models which predict proton cross section from heavy-ion data.**

***Index Terms*—heavy ion, indium phosphide, proton, silicon germanium, single event upset.**

Preprint

I. Introduction

SATELLITE borne communication systems have produced the demand for high-speed, low-power circuits robust enough to operate in an environment significantly more hostile than conditions typically found on earth. In addition to performance degradation from long-term exposure to radiation, electronics are also subject to single event upsets (SEU), initiated when a single cosmic particle incident on the circuit interacts with a transistor to corrupt data. Previous studies [1]-[4] have shown that SEU rates increase with frequency. Consequently, the importance of SEU has grown as microelectronic devices have become faster.

Within the earth's magnetic field, SEU are caused primarily by reactions with protons. The peak flux behind typical satellite enclosures is at about 1.5 earth radii (R_e) and drops significantly by 2 R_e In contrast, heavy ions are almost nonexistent in low-inclination, low earth-orbits. Instead, they pose the greatest threat at geosynchronous orbits ($\approx$ 6.7 R_e). The underlying physics by which protons and heavy ions produce SEU in on-board microelectronics is fundamentally similar. An ion traverses the sensitive volume depositing energy. This excites semiconductor electrons beyond the ionization threshold and creates electron-hole pairs. If the charge is sufficient, one or more bits in the clock or data stream will be altered and an upset occurs. However, protons often involve a second indirect mechanism. Incident protons interact with nuclei in the semiconductor to create daughter nuclei with LETs greater than that of the incident protons. These reaction products, along with the protons themselves, can liberate charge within the transistor's sensitive volume causing upsets [5].

SiGe and InP-based heterojunction bipolar transistors have gained prominence for their performance in high-speed applications. SiGe processing technology has a fairly mature processing base with high production yields. In addition, the combination of HBT and CMOS processes to form HBT BiCMOS technology produces a high level of integration [6]. InP technology is less mature than SiGe, however, InP based HBTs have material properties that prove advantageous for high-speed operation [7].

To date, there have been several experimental [8]-[9] and theoretical [10]-[11], studies of the SEU performance of SiGe circuits. Less work has been done for InP [3], [12]–[13]. Such information is essential for space-based applications. We present here the results of heavy-ion and proton SEU testing of SiGe and InP shift register circuits. These tests allow us to compare SEU responses of the two technologies and to determine the applicability in the high-speed regime of models predicting proton cross sections from heavy-ion results for these technologies.

II. Experimental Setup

Heavy-ion tests were conducted at Brookhaven National Laboratory (BNL). Devices under test (DUT) were placed in vacuum (Fig. 1) with RF and DC connections accomplished by means of feedthroughs containing SMA and 40 pin IDC connections. An HP71612A PPG/BERT pair was used to supply a pseudo-random number (PRN) code 2^7-1 bits long and clock to a differential panel that supplies the DUT with data and data-not as well as clock and clock-not signal. This sequence has every possible 7-bit pattern except seven consecutive zeros, with a nearly even mixture of zeroes and ones. DUT output is fed into the error detector on the BERT and a PC is interfaced with the BERT in order to record the total number of upset events, the number of bits in error for each event, and the device current during the test. Care was taken to ensure that clock and data inputs had optimal time alignment. A series of different ion beams (^{7}Li, ^{12}C, ^{28}Si, ^{35}Cl,

This work was supported in part by the Defense Threat Reduction Agency Radiation Hardened Microelectronics Program. MIPR 97-2005 and 00-2062

D. L. Hansen, P. Chu, K. Jobe, and S. F. Meyers are with Boeing Satellite Systems, Los Angeles, CA 90009 USA (310-364-6990; email: david.l.hansen@boeing.com)

P. W. Marshall, M. A. Carts, and C. J. Marshall were with Naval Research Laboratory and are now with NASA Goddard Spaceflight Center, Greenbelt MD

R. Lopez-Aguado, was with Boeing Satellite Systems, Los Angeles, CA 90009 USA. He is now with Raytheon Co.

^{58}Ni, ^{79}Br, and ^{127}I) and device angles were used to produce LET values between 0.3 and 80 MeV cm^2/mg.

Proton testing was conducted at Crocker Nuclear Laboratory (CNL), University of California, Davis using their 76" isochronous cyclotron. The data was taken with monoenergetic beams of 25, 38, and 63 MeV. Each 16-bit shift register was tested in the same test fixture, at normal incident angle and room temperature. Setup for the proton test was similar to that for the heavy ion tests with a few notable exceptions. The pattern generator of an Anritsu MP1758A/MP1764A BERT pair was used instead of the HP BERT; and because protons used produce significant secondary radiation, experimenters are required to be approximately 20 m away from the end of the beam line. Thus the equipment at CNL was operated remotely.

It should be noted that the LET values listed for the heavy ion tests in (MeV·cm^2)/mg are calculated for ions in Si. This proves to be a convenient unit of measure since it is in common use, and allows us to compare the effects of identical ions on different circuits. While the LET in Si is nearly identical to that in SiGe, the LET in InP is different, particularly at higher LET values (Table 1). However the differences do not change the results substantially.

The test circuits were fabricated using the IBM 5HP SiGe BiCMOS [14]-[15] and HRL Laboratories' InP G1 [7], [16] technologies. Parts were mounted onto test carriers and connected to a substrate to facilitate RF and DC connections. To ensure adequate penetration by the incident protons, devices were either fabricated without, or had the top passivation layer removed. Two samples from SiGe and InP technology were tested. The SiGe parts operated at clock speed ranges of 0.1 to 6.4 GHz, while the InP were clocked at 0.1 to 7 GHz. Both circuits use –5.2V and 130mA DC supplies. A block diagram for the two circuits is shown in Fig. 2.

The SiGe circuits are fabricated from three different size transistors with 1.0×0.5 μm^2, 2.5×0.5 μm^2 and 5.0×0.5 μm^2 emitters. The InP circuits are fabricated using transistors having 2×2 μm^2 and 2×5 μm^2 emitters. The SiGe and InP shift registers are nearly identical, however the InP transistors have a larger lateral area, leading to larger areas in the layout and consequently, longer line lengths. To compensate for this, the InP circuits have additional buffers in the data and clock input as well as in the latches. As a result, excluding the transistors in the bias circuitry, the SiGe shift register has 399 transistors, while the InP shift registers have 560 transistors. If we sum the area of the base collector junctions for all transistors in each circuit, we find that the total area is more than 13 times larger for the InP circuit than for the SiGe circuit. Bias circuitry transistors were not included in the transistor count because circuit simulations and subsequent microbeam testing of these devices indicate that the bias circuitry did not upset and therefore does not contribute to the total SEU cross section. Note, however, that microbeam test LETs were limited to 8 MeV cm^2/mg or less due to beam limitations. While it is possible that the bias and current source circuitry transistors will upset at the higher LETs used for these tests, it is reasonable to assume that at higher LETs, they will continue to be significantly less prone to upset.

III. Results and Discussion

A. Heavy Ion Data

Fig. 3 shows heavy ion data plotted with event cross-section and LET on the vertical and horizontal axes. The event cross section measures the number of ion-circuit interactions, and is independent of the number of data bits upset by an ion. We are distinguishing here the difference between disturbing data (information) bits and physical memory bits associated with a physical location. Multiple-bit upsets as used traditionally in the radiation community, for example, refer to a single particle strike that hits several physical sites due to the particle's trajectory across a circuit. In high-speed circuits, the charge injected at a single location affects multiple clock cycles and therefore impacts multiple data bits, temporally. To differentiate between the two mechanisms and minimize confusion about multiple bit upsets, we have chosen to refer to the disturbance of a train of data bits as an event, and to measure event cross sections to understand physical vulnerability of the circuit. Counting upsets in this manner, the increased vulnerability arises from the fact that the circuit spends more time in a vulnerable state when there are more clock edges [4].

These circuits show fairly typical cross section curves in that the cross section increases rapidly at low LET values and approaches a high-LET saturation cross section (σ_{sat}). Slight discontinuities are present between the data points collected with different ions. The discontinuities are about the same size as the scatter of the data points. Data correction methods suggested in [17] increase the values of the angled data making discontinuities larger, so no correction was applied to the data. The threshold LET ($L_{0.1}$), was determined as the LET value for at (σ_{sat})/10. This technique proves to be useful since $L_{0.1}$ is used in models comparing proton and heavy-ion cross-sections, as will be discussed later. For the SiGe circuit operating at 4 GHz, we measure a $L_{0.1}$ of 1.78 MeV cm^2/mg, while for the InP operating at 7.5 GHz circuit we measure $L_{0.1}$ = 4.12 MeV cm^2/mg.

We determined σ_{sat} by taking an average of the cross sections measured at the highest LET data points. For InP at 7.5GHz and SiGe at 4 GHz, σ_{sat} are about 1.5×10^{-4} cm^2, and 8.9×10^{-5} cm^2, respectively. In order to make a more direct comparison, a single data point taken using the InP device at 4 GHz with a LET of 24.7 MeV cm^2/mg is also plotted and suggests that at identical frequencies, the SiGe shift register would have a cross section more than three times that of the InP circuit (Fig. 3).

To investigate further, in Fig. 4 cross section is plotted as a function of data rate. As expected, cross section trends higher with data rate. In addition, the cross section does not trend toward zero as the data rate approaches zero. This is similar to previous results in GaAs HIGFET devices [4] where similar

Preprint

behavior was attributed to a combination of regions with cross sections that were data-rate dependent and data rate independent. The InP data points were taken using ions with a LET of 24.7 MeV cm^2/mg. This gives cross sections similar to those seen for the SiGe circuit using ions with a LET of 3.36 MeV cm^2/mg. As seen in Fig. 4, for identical LET and data rate, the InP circuit has a lower SEU cross-section than the SiGe circuit. This result is somewhat counter-intuitive since the InP circuits have more transistors and a greater total lateral area for all transistors in the circuit. Because no attempt was made to design SEU hardness into these parts it seems unlikely that design differences would be the primary cause of the differences in SEU performance. In addition, the InP shift register has more transistors and thus a larger lateral area than the SiGe shift register and operates with the same voltage and current. Thus the individual transistors within the InP shift register have, on average, less current flowing through them. Both of these factors should cause the InP cross section to be greater than that for SiGe [18]. The fact that the InP shift register cross section is lower than that for the SiGe suggests that relative to InP, SiGe transistors are more sensitive to SEU.

Since systems engineers need to know not the upset rate, but also how many data bits are affected in one upset, we were careful to look at both the number of events that occurred, and the number of bits affected by ion strikes. This is extremely important for mitigation purposes to determine error correction algorithm lengths required to achieve proper system performance. Figs. 5-6 show the average number of bits affected by each ion-interaction event. In Fig. 5, SiGe circuit shows an increasing number of bit errors per event with increasing LET. This is an expected consequence of the fact that as LET is increased, the amount of charge deposited increases and more time is required to dissipate the charge.

InP shows similar behavior except at lower LET values. At LET near L_0 where the cross section is orders of magnitude lower than saturation, the number of bit errors per event is highest. The number of bits in error can be a reflection of either the duration of the event or the location of the upset. In the former case multiple data bit upsets reflect the fact that charge introduced to the circuit by an incident ion dissipates according to the RC constant of the circuit node. This disrupts the data for an amount of time equivalent to several clock (or data bit) widths. In contrast, upsets of transistors in the clock tree can affect multiple flip-flops during a single clock period. Single event transients (SET) in the clock tree are fanned out through the clock tree buffers creating metastabilities in multiple flip-flops, and corrupting their data contents. The increased number of data bits in error during an event occurs at low LET and at high LET in InP. At the low end of the spectrum, charge deposited, and consequently upset time, is a minimum. Thus this behavior is best explained by the fact that at low LET, only the most sensitive transistors in the circuit are vulnerable to upset. In this case it would be the transistors in the clock tree, designed to drive minimum capacitance with maximum speed. This was later confirmed in microbeam testing. As LET increases, more transistors become vulnerable. The majority of the transistors in the circuit are in the flip-flops, data-input buffers, and data-output buffers. These transistors affect only a single bit location in the data stream during a given clock period. This has the net effect of decreasing the number of bits upset during an event, while the event cross-section increases, as we see in Figs. 4-5. While this explains the behavior of the InP shift registers, it does not explain why the behavior is not also seen in the SiGe shift register. We note that the InP shift register has an additional emitter-follower in the clock tree. Thus the simplest explanation for the difference in performance is the difference in design.

Fig. 6 shows the average number of bit errors per event as a function of frequency at a constant LET. InP data was taken at LET=24.7 MeV cm^2/mg, and is approximately constant up to a frequency of about 3 GHz after which in increases to a value of 1.6 at 8GHz. The SiGe data was taken at a number of different LET values. Below about 1 GHz, the average number of bits upset during an interaction is approximately constant and converges to single bit errors. The increase above 1 GHz is more rapid at higher LET. From Figs. 5-6 we see that heavy ion upsets in SiGe circuits typically last longer than those in the InP circuits. The InP circuits have a higher bandwidth than the SiGe circuits. This allows the charge deposited by an ion strike to be swept away more quickly, thus, on average, the SET corrupts fewer data bits. It is likely that this result also contributes to the lower cross section for the InP circuits (Fig. 3). In the case of clocked devices, such as shift registers, while the clock tree is always vulnerable, the data stream–which accounts for most of the transistors in the circuit--is only vulnerable during the set-up and hold time of the flip-flops. The higher bandwidth of the InP circuit not only gives shorter duration upsets, but also results in shorter set-up and hold times. Thus for the InP circuit, the temporal window of vulnerability is smaller.

B. Proton Data

The shift registers were also tested for SEU during proton irradiation. Both the SiGe and InP devices were irradiated to a total dose in excess of 3 Mrad without significant degradation in performance. This is in good agreement with the published results for total-dose testing [19]-[21]. Event cross-section as a function of data rate during proton irradiation is shown in Fig. 7. A number of features are readily apparent. The SiGe cross-section shows a pronounced jump near the bandwidth limit of the device. This is similar to the results seen previously [2]. The InP shift register was not tested near its bandwidth limit and cross section remains nearly constant over the entire frequency range. At all frequencies, the InP circuits have a lower interaction cross-section than SiGe circuits. The SiGe shift registers have a cross section more than 3 times higher, at 1 GHz, and more than 8 times higher at 3 GHz. Multiple data bit upsets were observed in both circuits (Fig. 8). In previous studies of InGaAs photodiodes the absence of multiple bit upsets indicated that direct ionization

Preprint

was the dominant mechanism [22]. This combined with the fact that the ratio of the SiGe cross section to the InP cross section was much higher for proton irradiation than for heavy ion irradiation suggests that the indirect mechanism involving nuclear fragmentation plays a role in proton-induced SEU. Further, we note that at 5 GHz, the number of bits upset during an event is higher for InP than for SiGe (Fig. 8) in contrast to what was seen in the heavy ion data (Fig. 5-6).

Because of the different nuclear reaction dynamics in the two materials, we expect the indirect upset mechanism to play different roles in the two types of devices. This warrants further consideration. The InP HBTs are fabricated from a number of different layers of InP, InGaAs, and AlInAs with a minimum concentration of any of the atoms within a layer of about 25%. In contrast, SiGe has a maximum Ge concentration of about 8-10%[23]. This is significant when looking at the cross sections for nuclear interaction. At the lower energies (25 and 38 MeV) Si has the largest cross section for proton interaction of all the semiconductor materials used. At 63 MeV, Ga has the largest cross section with Ge and Si second and third. However, for the heavier ions (where Si, Al, and P are the lighter ions) the cross sections are typically small, and recoiling nuclei typically have less energy [24]. InP devices are fabricated with a much higher percentage of the "heavy" semiconductor nuclei. This helps to explain their improved performance during proton irradiation. These results are consistent with previous non-ionizing energy loss (NIEL) calculations on solar cells showing that protons cause about 4 times more damage in Si solar cells than in those fabricated with InP [13].

The fact that we have both heavy-ion and proton data for these parts allows us to compare our results to models that estimate proton-SEU cross sections from heavy-ion data. Each of the models used was developed for Si based technologies. SiGe technologies use about 90% Si; the model assumptions are somewhat reasonable for the SiGe shift registers. However, InP based parts are less homogeneous [7]. The components of each layer of material have different ionization potentials, and would produce different daughter nuclei following nuclear reactions. Thus application of these models to the InP shift registers with valid material assumptions proves prohibitively difficult, and the models have been applied without any modification to account for the different material types. As a result disagreement between the models and the InP data is not surprising, however we make the comparison for illustrative purposes. We also note, for the InP models, the heavy ion data used was collected at 7.5 GHz, while the proton data was collected at 7GHz. Based on the data in Fig. 7 we anticipate that the error introduced by the frequency difference should be small.

Petersen [25]-[26] gives a model based on earlier work by Rollins [5], which is designed to give an estimate of proton cross-section within an order of magnitude. The basic premise is that the heavy ion and proton cross sections are proportional, and that the constant of proportionality is a function of the sensitive volume thickness and an efficiency term. The Bendel parameter A_b is derived from this relationship and refined based on a fit to SEU data from a number of different CMOS, RMOS, and bipolar parts to give

$$A_b = L_{0.1} + 15 \quad (1)$$

where $L_{0.1}$ is the LET at 1/10 of the saturated cross section. A comparison of this model to the results from the shift registers is shown in Figs. 9-10. For both SiGe and InP at 63 MeV, the model is about 40% of the experimental data, however at lower energies, the difference is greater than an order of magnitude. In the work by Rollins, the relationship between A_b and $L_{0.1}$ is derived from the ratio of the saturated cross sections σ_{sat} [proton]/ σ_{sat} [heavy ion]. In deriving (1), Petersen uses a simplified expression for the sensitive thickness [25 eq. (1) and following] and replaces the constant term based on a fit to experimental data. When we apply this model with values representative of the effective sensitive volume thickness (4 μm), at 25 MeV the model overestimates the SiGe data by a factor of 7, and the InP data by more than an order of magnitude. Agreement is worse at higher energies.

Barak et al. [27] have developed a semi-empirical model based on the energy deposited in the sensitive volume by an incident heavy ion. The model is based on an exponential fit of data that was taken during studies of surface barrier detectors in order to avoid reference to a specific set of nuclear reactions. These detectors had thicknesses of 2-100 μm and were studied using protons with 50–300 MeV. Using a sensitive volume thickness of 4 μm, we get the results shown in Figs. 9-10. The model over estimates the SiGe experimental data by less than a factor of 7 and overestimates the InP data by more than an order of magnitude.

Edmonds [28, eq. (7)-(8)] also bases his model on the energy deposited in the sensitive volume, with modest assumptions on the collection efficiency of the deposited charge. The values used for the liberated charge are derived from neutron experiments. Fig. 9-10 shows the results, the model underestimates the SiGe proton cross section by as much as a factor of 5 and overestimates the InP proton cross section by an equal amount. While this model proves to be the most accurate of the three used here for the SiGe parts, it does not provide an upper bound for proton cross sections as described.

IV. Conclusion

SiGe and InP shift registers were tested for SEU under heavy ion and proton irradiation. For heavy ion testing the data showed that at the same operating frequency and LET, the SiGe shift registers had a cross section about three times as large as the InP shift register. The InP circuit also shows fewer bits upset during each ion interaction event over most of the LET range. This suggests that higher bandwidth allows charge generated during an upset in the InP circuit to be dissipated more quickly than in the SiGe circuit. This has implications for error detection and correction code lengths and the system

Preprint

overhead required to minimize system errors; if longer correction codes are required, the real system throughput is compromised.

The difference in proton-upset cross section between the two technologies was more pronounced, than the difference in heavy-ion SEU cross section. This is in part because of the smaller cross-section for nuclear interaction of the semiconductor material in the InP devices. Using the heavy ion data, the proton cross section was estimated as a test of the applicability of the some of the published models. While the models in [26] and [28] were able to estimate the cross sections within an order of magnitude in both cases, neither model offered an upper bound of the cross section in both cases. In contrast, the model in [27] and a modified version of the model found in [25-26] provided an upper bound in both cases, but may prove overly conservative. The lack of agreement between these models and the data is not surprising since they were developed using older technologies. The data underscores the difficulty of developing models of this type and shows that caution is warranted in employing such models in high-speed circuits.

Preprint

ACKNOWLEDGMENT

The authors thank Mario Bustamante, Lew Cohn, Dwayne Lewis, Bruce Paine, Karl Peterschmidt, Munir Shoga, Steve Thomas and the staffs at BNL, CNL, HRL Laboratories, and IBM for their involvement in making this research possible.

REFERENCES

[1] S. Buchner, A. B. Campbell, D. McMorrow, J. Melinger, "Modification of single event upset cross section of an SRAM at high frequencies," *in Proceedings of the European Conference on Radiation and its Effects on Components and Systems (RADECS 95*), p. 326, 1995.

[2] R. A. Reed, M. A. Carts, P. W. Marshall, C. J. Marshall, S. Buchner, M. La Macchia, B. Mathes, D. McMorrow, "Single event upset cross sections at various data rates," *IEEE Trans. Nucl. Sci*. vol. 43, p. 2862, 1996.

[3] D. L. Hansen, P. Chu, S. F. Meyer, "Effects of data rate and transistor size on single event upset cross-sections for InP based circuits," submitted *IEEE Trans. Nucl. Sci*.

[4] P. W. Marshall, C. J. Dale, T. R. Weatherford, M. La Machia, K. A. LaBel, "Particle-induced mitigation of SEU sensitivity in high data rate GaAs HIGFET technologies," *IEEE Trans. Nucl. Sci*. vol. 42, p. 1844, 1995.

[5] J. G. Rollins, "Estimation of proton upset rates from heavy ion test data," *IEEE Trans. Nucl. Sci*. vol. 37, p. 1961, 1990.

[6] J. M. Roldán, W. E. Ansley, J. D. Cressler, S. D. Clark, D. Nguyen-Ngoc, "Neutron radiation tolerance of advanced UHV/CVD SiGe HBT BiCMOS technology," *IEEE Trans. Nucl. Sci*. vol44, p. 1965, 1997.

[7] S. Thomas, C. H. Fields, M. Sokolich, K. Kiziloglu, D. Chow, "Fabrication of InP-based HBT integrated circuits," *Indium Phosphide Relat. Matter, Conference Proceedings* 2000, p. 286, 2000.

[8] P. W. Marshall, M. A. Carts, A. Campbell, D. McMorrow, S. Buchner, R. Stewart, R. Randall, B. Gilbert, R. A. Reed, "Single event effects in circuit-hardened SiGe HBT logic at gigabit per second data rates," *IEEE Trans. Nucl. Sci*. vol. 47, p. 2669, 2000.

[9] R. A. Reed, P. W. Marshall, H. Ainspan, C. J. Marshall, H. S. Kim, J. D. Cressler, G. Niu, K. A. LaBel, "Single event upset test results on a prescalar fabricated in IBM's 5HP silicon germanium heterojunction bipolar transistors BiCMOS technology," *2001 IEEE Rad Effects Data Workshop*, p. 172, 2001.

[10] G. Niu, J. D. Cressler, M. Shoga, K. Jobe, P. Chu, D. L. Harame, "Simulation of SEE-induced charge collection in UHV/CVD SiGe HBTs," *IEEE Trans. Nucl. Sci*. vol. 47, p. 2682, 2000.

[11] G. Niu, R Krithivasan, J. D. Cressler, P. Marshall, C. Marshall, R. Reed, D. L. Harame, "Modeling of single-event effects in circuit-hardened high-speed SiGe HBT logic," *IEEE Trans. Nucl. Sci*. vol. 48, p. 1849, 2001.

[12] T. R. Weatherford, P.K. Schiefelbein "SEE analysis of digital InP-based HBT circuits at gigahertz frequencies," *IEEE Trans. Nucl. Sci*., vol. 48, p. 1980, 2001.

[13] R. J. Walters, S.R. Messenger, G.P. Summers, E. A. Burke, C. J. Keavney, "Space radiation effects in InP solar cells," *IEEE Trans. Nucl. Sci*., vol. 38, p. 1153, 1991.

[14] D. C. Ahlgren, M. Gilbert, D. Greenberg, S. J. Jeng, J. Malinowski, D. Nguyen-Ngoc, K. Schonenberg, K. Stein, R. Groves, K. Walter, G. Hueckel, D. Colavito, G. Freeman, D. Sunderland, D. L. Harame, B. Meyerson, "Manufacturability demonstration of an integrated SiGe HBT technology for the analog and wireless marketplace," *Tech. Digest IEEE Int'l. Elect. Dev. Mtg*., p. 859, 1996.

[15] D. L. Harame, D. C. Ahlgren, D. D. Coolbaugh, J. S. Dunn, G. G. Freeman, J. D. Gillis, R. A. Groves, G. N. Hendersen, R. A. Johnson, A. J. Joseph, S. Subbanna, A. M. Victor, K. M. Watson, C. S. Webster, P. J. Zampardi, "Current status and future trends of SiGe BiCMOS technology," *IEEE Trans. Elec. Dev*. vol. 48, p. 2575, 2001.

[16] J. F. Jensen, M. Hafizi, W. E. Stanchina, R. A. Metzger, D. B. Rensch, "39.5-GHz Static frequency divider implemented in AlInAs/GaInAs HBT technology," *14th Annual IEEE GaAs IC Symposium, 1992 Technical Digest,* p. 101.

[17] E. L. Petersen, J. C. Pickel, J. H. Adams Jr., E. C. Smith, "Rate prediction for single event effects – a critique," *IEEE Trans. Nucl. Sci*. vol. 39, p. 1577, 1992.

[18] D. R. Roth, P. J. McNulty, W. G. Abdel-Kader, L. Strauss, E. G. Stassinopoulos, "Monitoring SEU parameters at reduced bias," *IEEE Trans. Nucl. Sci*., V40, p1702, 1993.

[19] Cressler, J. D, R. Krithivasan, G. Zhang, G. Niu, P. W. Marshall, H. S. Kim, R. A. Reed, M. J. Palmer, A. J. Joseph, "An investigation of the origins of the variable proton tolerance in multiple SiGe HBT BiCMOS technology generations", *IEEE Trans. Nucl. Sci*., vol. 49, p. 3203, Dec. 2002.

[20] Wilkins, R., S. Shojah-Ardalan, W. P. Kirk, G. F. Spencer, R. T. Bate, A. C. Seabaugh, R. Lake, P. Stelmaszyk, A. D. Wieck, T. N. Fogarty, "Ionization and displacement damage irradiation studies of quantum devices resonant tunneling diodes and two-dimensional electron gas transistors," *IEEE Trans. Nucl. Sci*., V46, p1702, 1999.

[21] *InP HBTs: Growth, Processing and Applications* S. J. Pearton, and B. Jalali, eds., Norwood, MA Artech 1995

[22] P. W. Marshall, C. J. Dale, M. A. Carts, K. A. Label, "Particle-induced bit errors in high performance fiber optic data links for satellite data management," *IEEE Trans. Nucl. Sci*. vol. 41, p. 1958, 1994

[23] J. M. Roldán, G. Niu, W. E. Ansley, J. D. Cressler, S. D. Clark, D. C. Ahlgren, "An investigation of the spatial location of proton-induced traps in SiGe HBTs," *IEEE Trans. Nucl. Sci*. vol. 45, p. 2424, 1998.

[24] E. L. Petersen, "Nuclear reactions in semiconductors," *IEEE Trans. Nucl. Sci*. vol. NS-27, p. 1494, 1980.

[25] E.L. Petersen, "The relationship of proton and heavy ion upset thresholds," *IEEE Trans. Nucl. Sci*. vol. 39, p. 1600, 1992.

[26] E. L. Petersen, "Approaches to proton single-event rate calculations," *IEEE Trans. Nucl. Sci*. vol. 43, p. 496, 1996.

[27] J. Barak, J. Levinson, A. Akkerman, Y. Lifshitz, M. Victoria, "A simple model for calculating proton induced SEU," *IEEE Trans. Nucl. Sci*. vol. 43, p. 979, 1996.

[28] L. D. Edmonds, "Proton SEU cross sections derived from heavy-ion test data," *IEEE Trans. Nucl. Sci*. vol. 47, p. 1713, 2000.

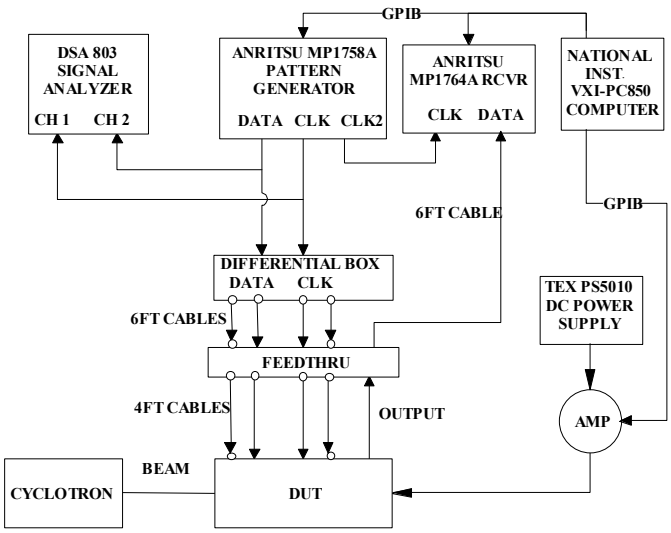

Fig. 1 Experimental Setup

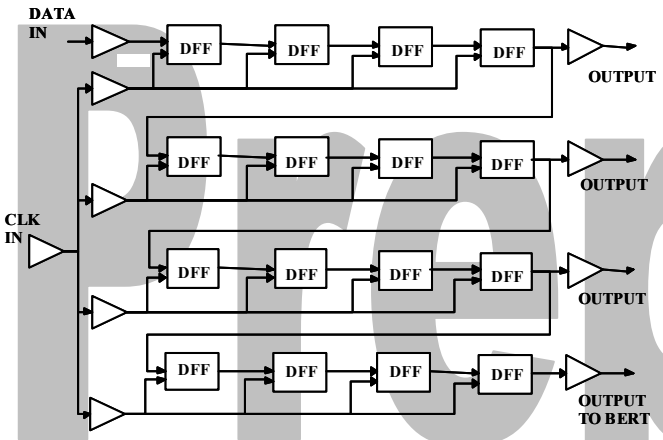

Fig. 2 Block diagram of 16-bit shift register. Three of the outputs monitored intermediate stages of the shift register and were not used for data taken in this paper

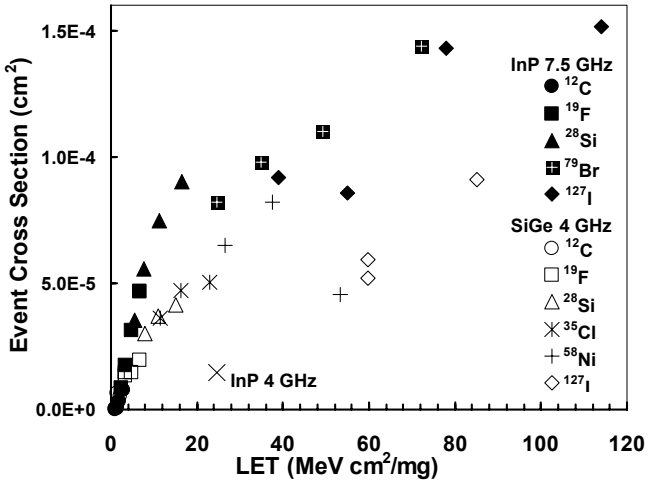

Fig. 3 Event cross-section vs. LET for the InP and SiGe circuits under heavy ion irradiation. Symbols indicate the ion type used at each data point. InP and SiGe data were collected at 7.5 and 4 GHz respectively. One data point for InP collected at 4 GHz is plotted for comparison. Statistical error bars are roughly the size of the symbols. Note the scale is linear.

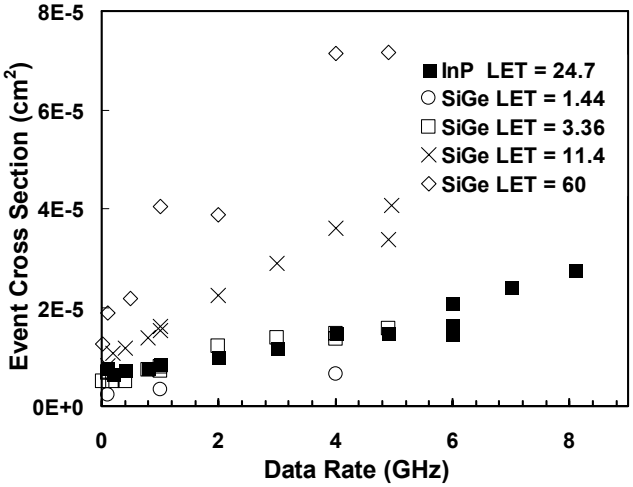

Fig. 4 Event cross-section vs. data rate for the InP and SiGe circuits under heavy ion irradiation. Symbols indicate LET at each data point. Statistical error bars are roughly the size of the symbols. Note the scale is linear.

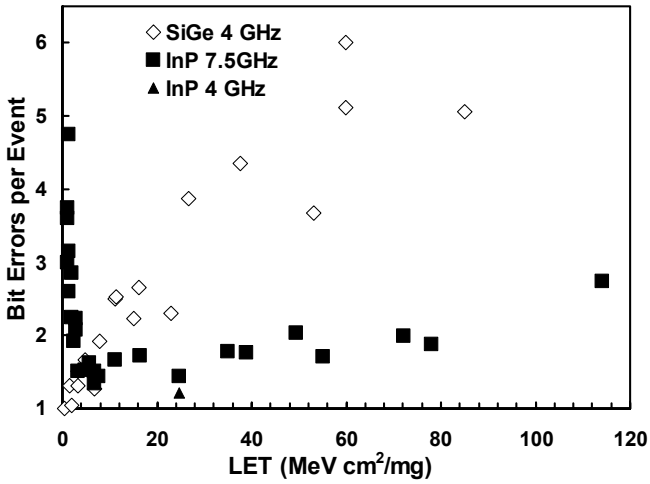

Fig. 5 Average number of bits in error for each ion-interaction event as a function of LET for the InP and SiGe circuits under heavy ion irradiation. InP and SiGe data were collected at 7.5 and 4 GHz respectively. One data point for InP collected at 4 GHz is plotted for comparison. Statistical error bars are roughly the size of the symbols.

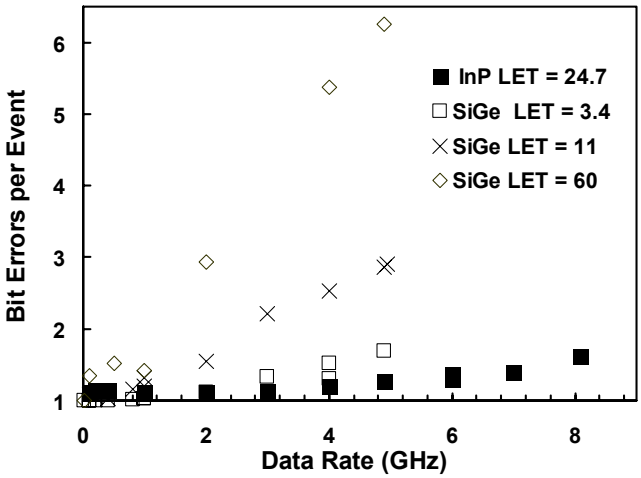

Fig. 6 Average number of bits in error for each ion-interaction event as a function of data rate for the InP and SiGe circuits under heavy ion irradiation. Statistical error bars are roughly the size of the symbols.

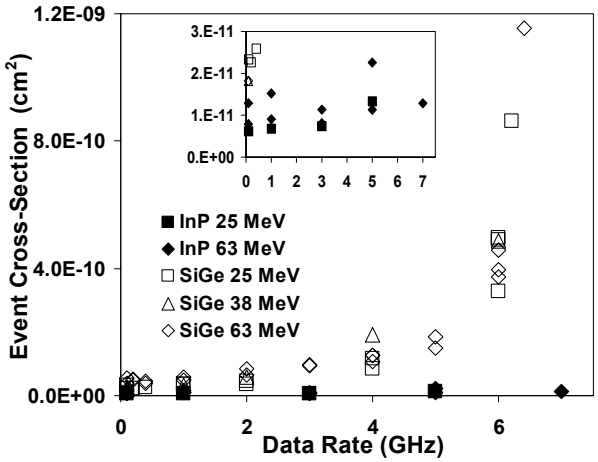

Fig. 7 Event cross-section vs. data rate for InP and SiGe circuits under proton irradiation. Proton energy is indicated by the symbol. Inset graph gives greater detail of the InP cross section. Statistical error bars are roughly the size of the symbols. Note the scale is linear.

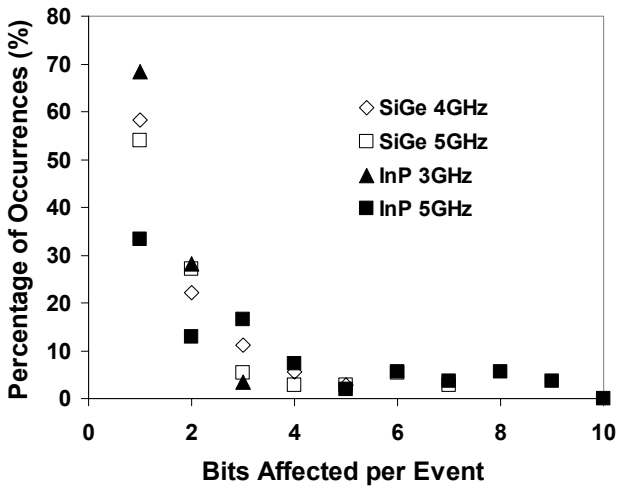

Fig. 8 Plot of the bits affected during a SEU event. Y-axis represents the percentage of events with a given number of bits in error. Each curve was taken during a single run for the InP and SiGe 16 bit shift registers under irradiation by 63 MeV protons.

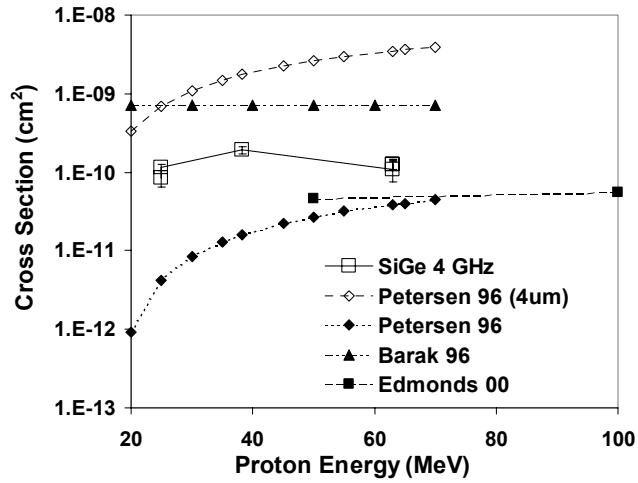

Fig. 9 Event cross-section vs. proton energy for the SiGe shift register. Open squares (□) represent SiGe shift register data. Closed diamonds (♦) represent model in [26], open diamonds (◇) represent the model in [26] with the sensitive volume thickness set to 4 μm. The other models are found in [27] (▲) and [28] (■). Error bars shown are statistical.

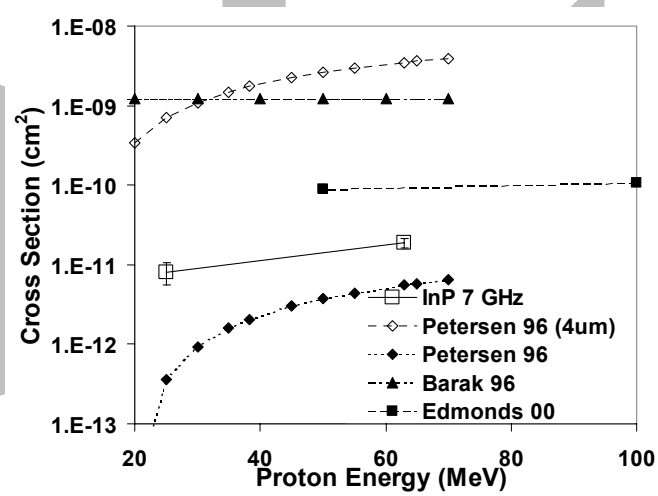

Fig. 10 Event cross-section vs. proton energy for the InP shift register. Open squares (□) represent InP shift register data. Closed diamonds (♦) represent model in [26], open diamonds (◇) represent the model in [26] with the sensitive volume thickness set to 4 μm. The other models are found in [27] (▲) and [28] (■). Error bars shown are statistical.

TABLE I
LET IN SIGE AND INP FOR DIFFERENT IONS

Ion	Energy (MeV)	LET SiGe (MeV cm^2/mg)	LET InP (MeV cm^2/mg)
^{12}C	99	1.4	0.98
^{19}F	141	3.4	2.35
^{28}Si	186	7.9	5.2
^{79}Br	283	37	27
^{127}I	343	60	41.1